Foreword

Welcome to the growing family of new NISSAN owners. This vehicle is delivered to you with confidence. It was produced using the latest techniques and strict quality control.

This manual was prepared to help you understand the operation and maintenance of your vehicle so that you may enjoy many miles of driving pleasure. Please read through this manual before operating your vehicle.

A separate Warranty Information Booklet explains details about the warranties covering your vehicle. The NISSAN Service and Maintenance Guide explains details about maintaining and servicing your vehicle. Additionally, a separate Customer Care booklet will explain how to resolve any concerns you may have with your vehicle.

Your NISSAN dealer knows your vehicle best. When you require any service or have any questions, we will be glad to assist you with the extensive resources available for you.

READ FIRST — THEN DRIVE SAFELY

Before driving your vehicle please read your Owner's Manual carefully. This will ensure familiarity with controls and maintenance requirements, assisting you in the safe operation of your vehicle.

WARNING

IMPORTANT SAFETY INFORMATION REMINDERS FOR SAFETY!

Follow these important driving rules to help ensure a safe and comfortable trip for you and your passengers!

- **Never drive under the influence of alcohol or drugs.**
- **Always observe posted speed limits and never drive too fast for conditions.**
- **Always use your seat belts. Refer to "Child safety" and "Child restraints" in the " Safety — Seats, seat belts and supplemental restraint system" section for precautions regarding children.**
- **Always provide information about the proper use of vehicle safety features to all occupants of the vehicle.**
- **Always review this Owner's Manual for important safety information.**

MODIFICATION OF YOUR VEHICLE

This vehicle should not be modified. Modification could affect its performance, safety or durability, and may even violate governmental regulations. In addition, damage or performance problems resulting from modification may not be covered under NISSAN warranties.

WHEN READING THE MANUAL

This manual includes information for all options available on this model. Therefore, you may find some information that does not apply to your vehicle.

All information, specifications and illustrations in this manual are those in effect at the time of printing. NISSAN reserves the right to change specifications or design at any time without notice.

IMPORTANT INFORMATION ABOUT THIS MANUAL

You will see various symbols in this manual. They are used in the following ways:

WARNING

This is used to indicate the presence of a hazard that could cause death or serious personal injury. To avoid or reduce the risk, the procedures must be followed precisely.

CAUTION

This is used to indicate the presence of a hazard that could cause minor or moderate personal injury or damage to your vehicle. To avoid or reduce the risk, the procedures must be followed carefully.

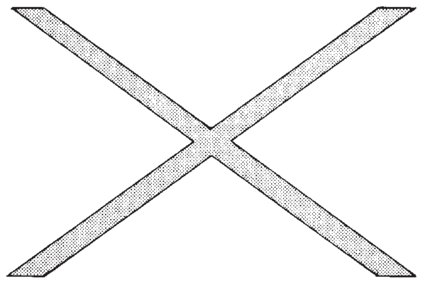

SIC0697

If you see this symbol, it means **Do not do this** or **Do not let this happen**.

If you see a symbol similar to these in an illustration, it means the arrow points to the front of the vehicle.

Arrows in an illustration that are similar to these indicate movement or action.

Arrows in an illustration that are similar to these call attention to an item in the illustration.

© 2004 NISSAN MOTOR CO., LTD.
TOKYO, JAPAN

All rights reserved. No part of this Owner's Manual may be reproduced or stored in a retrieval system, or transmitted in any form, or by any means, electronic, mechanical, photocopying, recording or otherwise, without the prior written permission of Nissan Motor Co., Ltd.

Welcome To The World Of NISSAN

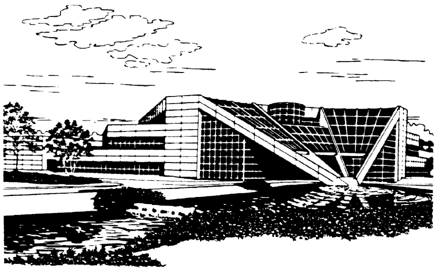

NISSAN TECHNICAL CENTER NORTH AMERICA, INC.
in Farmington Hills, Michigan

NISSAN MANUFACTURING FACILITY
in Smyrna, Tennessee

WFW0002

Your new NISSAN is the result of our dedication to produce the finest in safe, reliable and economical transportation. Your vehicle is the product of a successful worldwide company that manufactures cars and trucks in over 17 countries and distributes them in 170 nations.

NISSAN vehicles are designed and manufactured by Nissan Motor Co., Ltd. which was founded in Tokyo, Japan in 1933, and NISSAN affiliates world wide, collectively growing to become the fifth largest automaker in the world. In addition to cars and trucks, NISSAN also makes forklift trucks, marine engines, boats and other diversified products.

NISSAN has made a substantial and growing investment in North America. NISSAN'S commitment is nearly $4 billion dollars in capital investments in facilities across the continent. Some of the facilities include the Nissan Manufacturing facility in Smyrna, Tennessee, vehicle styling design at Nissan Design America in San Diego, California, and engineering at Nissan Technical Center North America in Farmington Hills, Michigan. Additionally, NISSAN employs nearly 18,000 people throughout the United States, Canada, and Mexico. An additional 71,000 people work for the 1,500 NISSAN and INFINITI dealers across North America.

NISSAN is also a substantial contributor to the Canadian economy. Nissan Canada Inc., its suppliers and over 140 dealers employ approximately 4,500 people. These include company employees and the staffs of NISSAN dealers all across Canada. In addition, many Canadians work for companies that supply NISSAN and NISSAN dealers with materials and services ranging from operation of port facilities and transportation services to the supply of lubricants, parts and accessories.

NISSAN pioneered the use of electronics and computers in automobiles, and has led the industry in improving both performance and fuel efficiency through new engine designs and the use of synthetic materials to reduce vehicle weight. The company has also developed ways to build quality into its vehicles at each stage of the production process, both through extensive use of automation and — most importantly — through an awareness that **people** are the central element in quality control.

From the time the parts arrived from our suppliers until you took delivery of your new Nissan, dozens of checks were made to ensure that only the best job was being done in producing and delivering your vehicle. NISSAN also takes great care to ensure that when you take your NISSAN to your dealer for maintenance, the service technician will perform his work according to the quality standards that have been established by the factory.

Safety has also been built into your NISSAN. As you know, seat belts are an integral part of the safety systems that will help protect you and your passengers in the event of a sudden stop or an accident. We urge you to use the seat belts every time you drive the vehicle.

The NISSAN story of growth and achievement reflects our major goal: to provide you, our customer, with a vehicle that is built with quality and craftsmanship — a product that we can be proud to build and you can be proud to own.

NISSAN CUSTOMER CARE PROGRAM

NISSAN CARES ...

Both NISSAN and your NISSAN dealer are dedicated to serving all your automotive needs. Your satisfaction with your vehicle and your NISSAN dealer are our primary concerns. Your NISSAN dealer is always available to assist you with all your automobile sales and service needs.

However, if there is something that your NISSAN dealer cannot assist you with or you would like to provide NISSAN directly with comments or questions, please contact our (NISSAN's) Consumer Affairs Department using our toll-free number:

1-800-387-0122

The Consumer Affairs Department will ask for the following information:

— Your name, address, and telephone number
— Vehicle identification number (on dash panel)
— Date of purchase
— Current odometer reading
— Your NISSAN dealer's name
— Your comments or questions

OR

You can write to NISSAN with the information on the left at:

Nissan Canada Inc.
5290 Orbitor Drive
Mississauga, Ontario L4W 4Z5

We appreciate your interest in NISSAN and thank you for buying a quality NISSAN vehicle.

Table of Contents

Illustrated table of contents	0
Safety — Seats, seat belts and supplemental restraint system	1
Instruments and controls	2
Pre-driving checks and adjustments	3
Heater, air conditioner and audio systems	4
Starting and driving	5
In case of emergency	6
Appearance and care	7
Maintenance and do-it-yourself	8
Technical and consumer information	9
Index	10

0 Illustrated table of contents

Exterior 0-2
Passenger compartment 0-3
Instrument panel 0-4
Meters and gauges 0-6
Engine compartment check locations 0-7

EXTERIOR

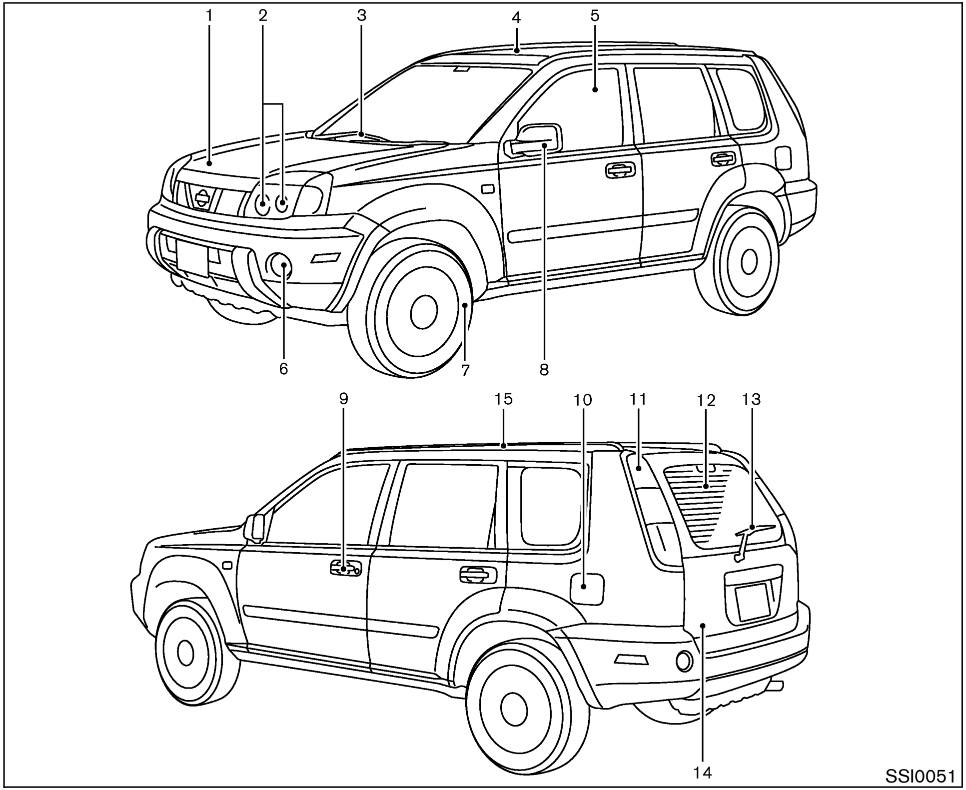

1. Engine hood (Page 3-8)
2. Headlight and turn signal switch (P.2-17)
3. Windshield wiper and washer switch (P.2-15)
4. Sunroof (*) (P.2-34)
5. Power windows (P.2-32)
6. Fog light switch (*) (P.2-19)
7. Tires
   — Wheel and tires (P.8-31)
   — Flat tire (P.6-2)
8. Mirrors (P.3-12)
9. Doors (P.3-3)
   — keys (P.3-2)
   — door locks (P.3-3)
   — keyfob (P.3-4)
10. Fuel filler lid (P.3-10)
11. Rear combination light (P.8-32)
12. Rear window defroster switch (P.2-16)
13. Rear window wiper and washer switch (P.2-16)
14. Back door (P.3-8)
15. Roof rack (P.2-31)

* If so equipped

PASSENGER COMPARTMENT

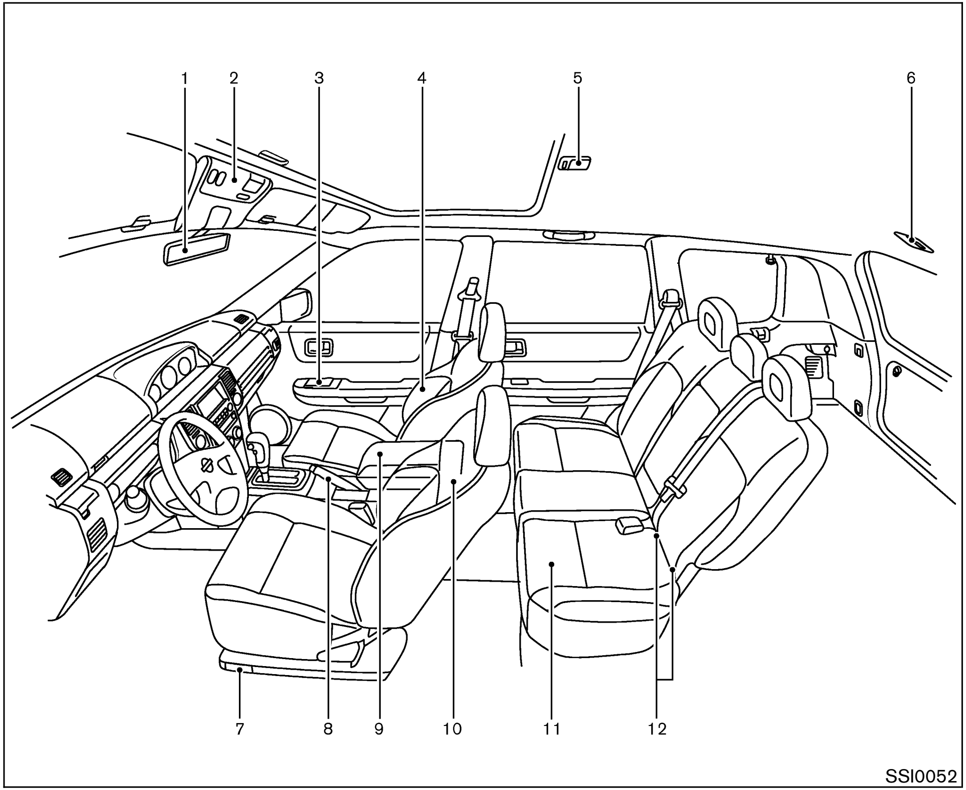

1. Inside mirror (P.3-12)
2. Room light/Map light (P.2-35/P.2-36)
3. Power windows (P.2-32)
4. Front seat (P.1-2)
5. Room light (P.2-35)
6. Luggage room light (P.2-37)
7. Fuel filler lid opener lever (P.3-10)
8. Parking brake (P.5-15)
9. Console box (P.2-29)
10. Rear cup holders (P.2-26)
11. Rear seat (P.1-6)
12. LATCH system (P.1-25)

INSTRUMENT PANEL

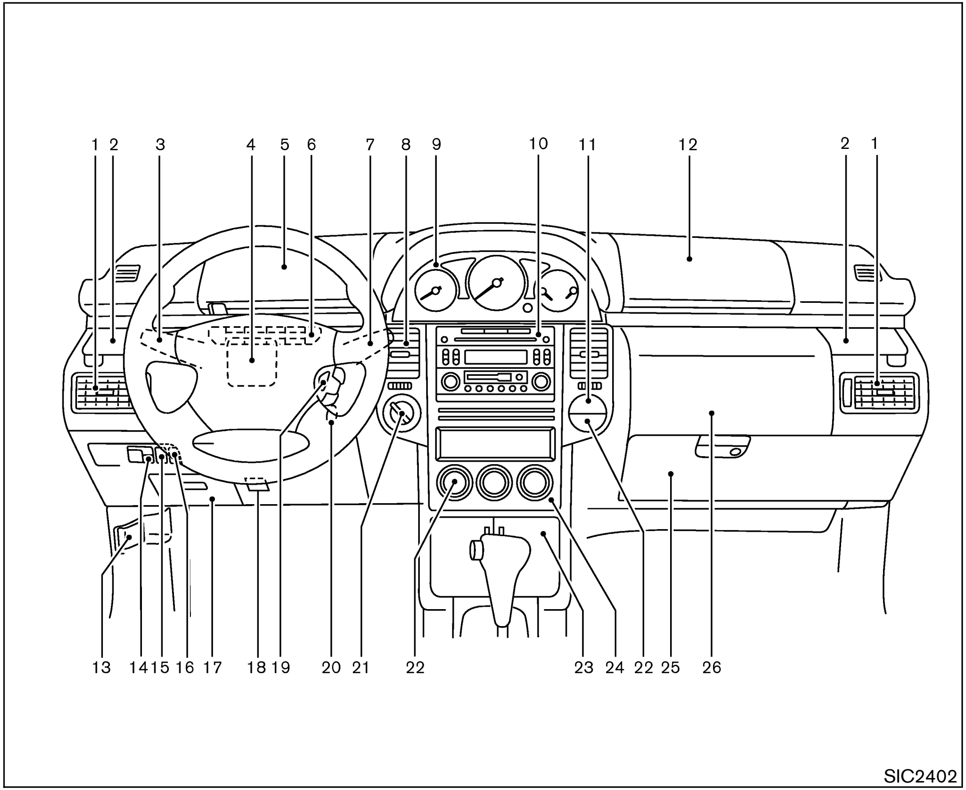

1. Side ventilator (P.4-2)
2. Cup holder (P.2-26)
3. Headlight/turn signal switch (P.2-17)
4. Driver air bag (P.1-31)
5. Driver's box (P.2-24)
6. Driver's side ventilator (P.4-2)
7. Windshield (P.2-15)/rear window (P.2-16) wiper and washer switch
8. Center ventilator (P.4-2)
9. Meters and gauges (P.2-3)
10. Audio system (P.4-10)
11. Hazard warning flasher switch (P.2-19)
12. Passenger air bag (P.1-31)
13. Hood release switch (P.3-8)
14. Outside mirror remote control (P.3-12)
15. Instrument brightness control (P.2-18)
16. VDC (Vehicle dynamic control) off switch (*) (P.2-21)
17. Fuse box cover (P.8-22)
18. Tilting steering wheel lock lever (P.3-11)
19. Cruise control switch (P.5-16)
20. Ignition switch (P.5-6)
21. 4WD mode switch (*) (P.5-20)/SNOW mode switch (*) (P.2-21)
22. Rear window/outside mirror defroster switch (P.2-16)

23. Multi box (P.2-25)
24. Heater/air conditioner control (P.4-3)
25. Glove box (P.2-28)
26. Upper glove box (P.2-28)

* If so equipped

METERS AND GAUGES

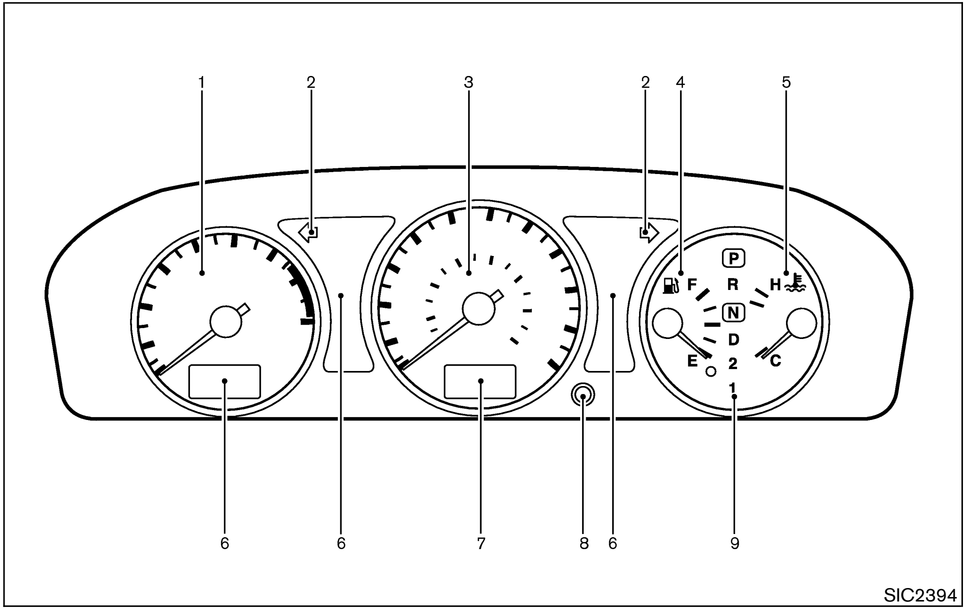

1. Tachometer (P.2-4)
2. Turn signal indicator (P.2-18)/Hazard indicator (P.2-19)
3. Speedometer (P.2-4)
4. Fuel gauge (P.2-5)
5. Engine coolant temperature gauge (P.2-5)
6. Warning/Indicator lights (P.2-7)
7. Odometer (Total/Twin trip) (P.2-4)/Clock (P.2-22)
8. Reset button for trip odometer (P.2-4)/Clock adjustment (P.2-22)
9. A/T shift position indicator (*) (P.5-10)

* If so equipped

ENGINE COMPARTMENT CHECK LOCATIONS

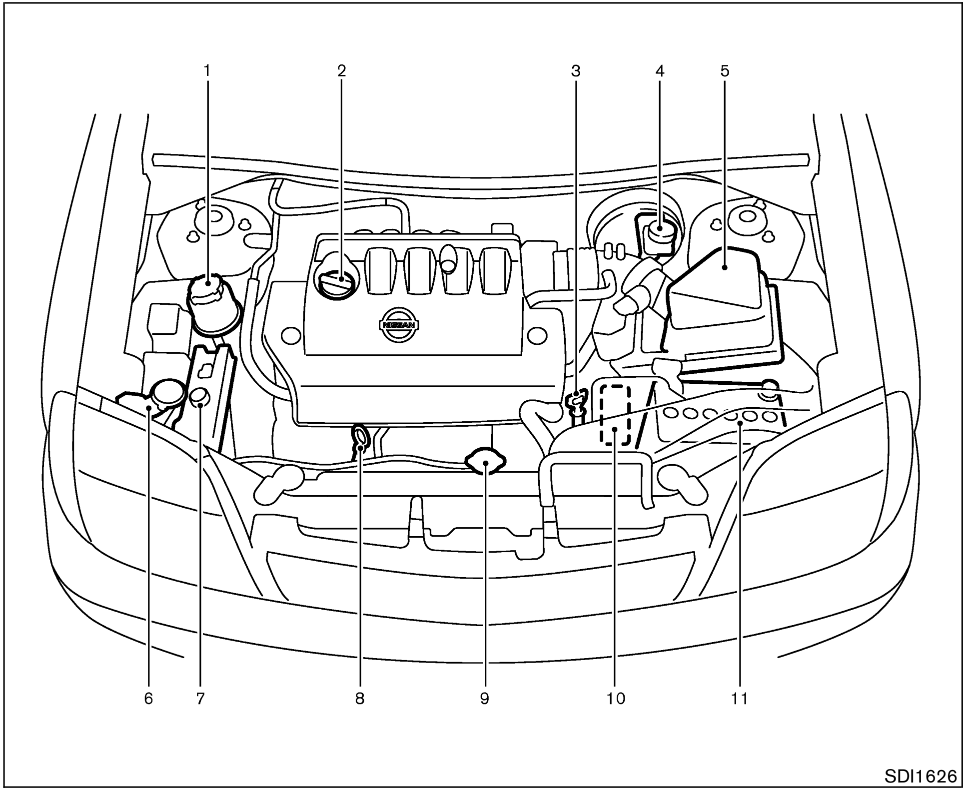

1. Power steering fluid reservoir (P.8-14)
2. Engine oil filler cap (P.8-11)
3. Automatic transmission fluid dipstick (A/T model) (P.8-13)
4. Brake and clutch (M/T) fluid reservoir (P.8-14)
5. Air cleaner (P.8-18)
6. Window washer fluid reservoir (P.8-15)
7. Engine coolant reservoir (P.8-8)
8. Engine oil dipstick (P.8-10)
9. Radiator cap (P.8-9)
10. Fuse/Fusible link holder (P.8-22)
11. Battery (P.8-15)

MEMO

1 Safety — Seats, seat belts and supplemental restraint system

Seats 1-2
- Front manual seat adjustment 1-2
- Front power seat adjustment (for driver's side) 1-4
- Lumbar support (for driver's seat) 1-5
- Rear seat adjustment 1-6
- Head restraint adjustment 1-8
- Active head restraint (front seats) 1-9
- Armrest 1-9

Seat belts 1-10
- Precautions on seat belt usage 1-10
- Child safety 1-13
- Pregnant women 1-13
- Injured persons 1-14
- Three-point type seat belt with retractor 1-14
- Rear center seat belt 1-17
- Seat belt extenders 1-18
- Seat belt maintenance 1-18

Child restraints 1-18
- Precautions on child restraints 1-18
- Installation on rear seat center or outboard positions 1-20
- LATCH (Lower Anchors and Tethers for CHildren) system 1-25
- Top tether strap child restraint 1-26
- Installation on front passenger seat 1-28

Supplemental restraint system 1-31
- Precautions on supplemental restraint system 1-31
- Supplemental air bag warning labels 1-41
- Supplemental air bag warning light 1-41

SEATS

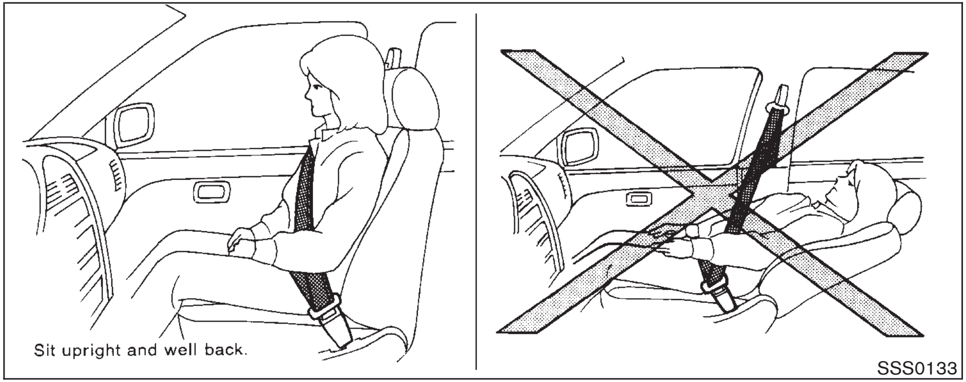

WARNING

- **Do not ride in a moving vehicle when the seatback is reclined. This can be dangerous. The shoulder belt will not be against your body. In an accident you could be thrown into it and receive neck or other serious injuries. You could also slide under the lap belt and receive serious internal injuries.**
- **For most effective protection when the vehicle is in motion, the seat should be upright. Always sit well back in the seat and adjust the seat belt properly. See "Precautions on seat belt usage" later in this section.**

FRONT MANUAL SEAT ADJUSTMENT

WARNING

- **Do not adjust the driver's seat while driving so full attention may be given to vehicle operation. The seat may move suddenly and could cause loss of control of the vehicle.**
- **After adjustment, gently rock in the seat to make sure it is securely locked.**

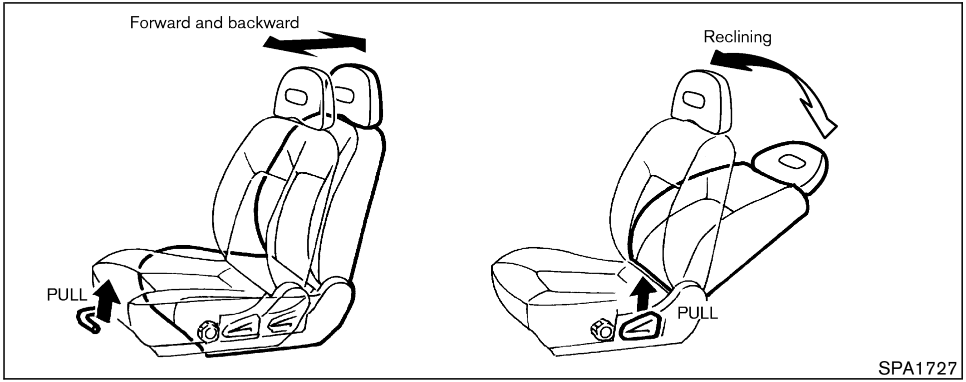

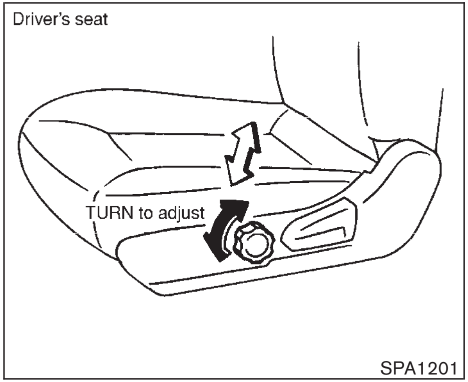

Forward and backward

Pull the lever up while you slide the seat forward or backward to the desired position. Release the lever to lock the seat in position.

Reclining

To recline the seatback, pull the lever up and lean back. To bring the seatback forward again, pull the lever and move your body forward. The seatback moves forward.

The reclining feature allows adjustment of the seatback for occupants of different sizes to help obtain proper seat belt fit. (See “Precautions on seat belt usage” later in this section.) The seat-back may also be reclined to allow occupants to rest when the vehicle is parked.

Seat lifter (for driver's side)

Turn the dial and adjust the angle and height of the seat cushion to the desired position.

FRONT POWER SEAT ADJUSTMENT (for driver's side)

WARNING

- **Do not adjust the driver's seat while driving so full attention may be given to vehicle operation.**
- **Do not leave children unattended inside the vehicle. They could unknowingly activate switches or controls. Unattended children could become involved in serious accidents.**

Operating tips

- The seat motor has an auto-reset overload protection circuit. If the motor stops during operation, wait 30 seconds, then reactivate the switch.
- Do not operate the power support seat for a long period of time when the engine is off. This will discharge the battery.

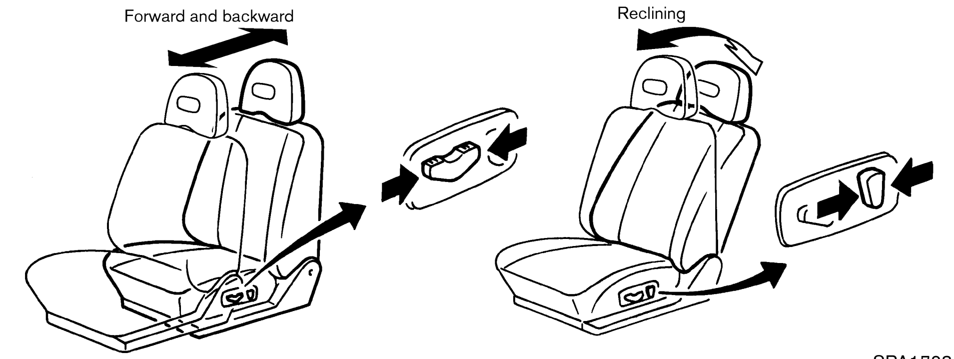

SPA1728

Forward and backward

Moving the switch forward or backward will slide the seat forward or backward to the desired position.

Reclining

Move the recline switch backward until the desired angle is obtained. To bring the seatback forward again, move the switch forward and move your body forward. The seatback will move forward.

The reclining feature allows adjustment of the seatback for occupants of different sizes to help obtain proper seat belt fit. (See "Precautions on seat belt usage" later in this section.) The seatback may also be reclined to allow occupants to rest when the vehicle is parked.

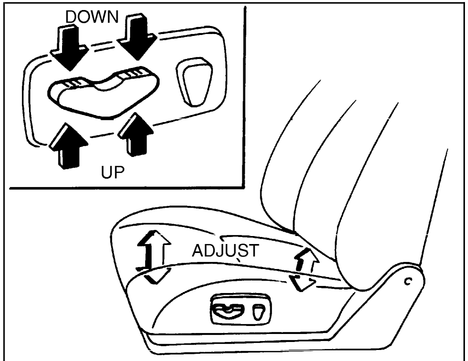

SSS0166

Seat lifter

Push the front or rear end of the switch up or down to adjust the angle and height of the seat cushion.

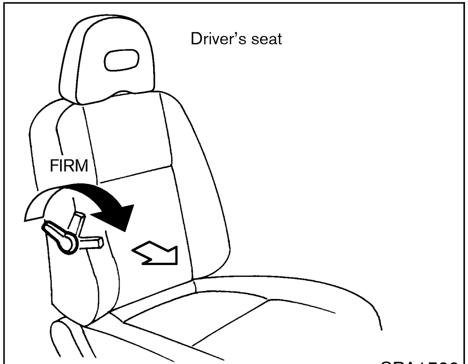

SPA1729

LUMBAR SUPPORT (for driver's seat)

Turn the lever forward or backward to adjust the seat lumbar area.

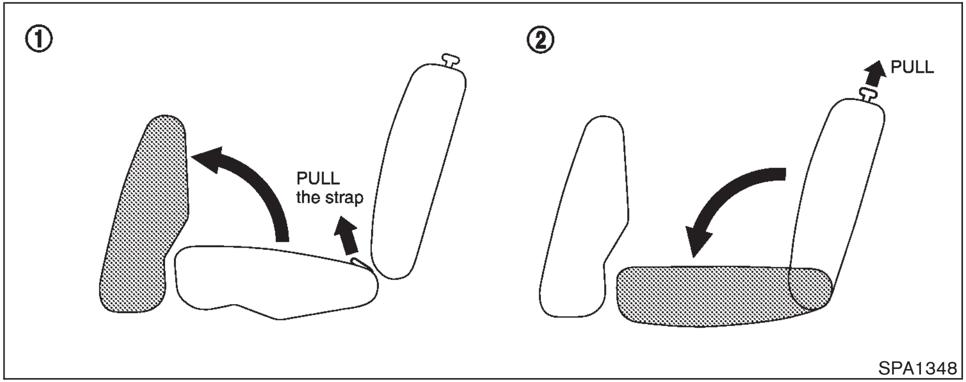

REAR SEAT ADJUSTMENT

Folding

1. Remove the rear seat cup holder from the center console.
2. Secure the seat belt on the clip.
3. Remove the head restraints. (The removed head restraints can be stored on the reclining lock plate.)
4. Pull the strap forward and bring up the seat cushion.
5. After removing the tonneau cover (if so equipped) from each rear seatback, pull up the knob and fold the seatback down.
6. When resetting the seat, be sure to install the head restraints.

WARNING

- **Never allow anyone to ride in the cargo area or on the rear seat when it is in the fold-down position. Use of these areas by passengers without proper restraints could result in serious injury in an accident or sudden stop.**
- **It is extremely dangerous to ride in a cargo area inside of a vehicle. In a collision, people riding in these areas are more likely to be seriously injured or killed.**
- **Do not allow people to ride in any area of your vehicle that is not equipped with seats and seat belts. Be sure everyone in your vehicle is in a seat and using a seat belt properly.**
- **Do not fold down the rear seats when occupants are in the rear seat area or any luggage is on the rear seat.**
- **Head restraints should be adjusted properly as they may provide significant protection against injury in an accident. Always replace and adjust them properly if they have been removed for any reason.**
- **If the head restraints are removed for any reason, they should be securely stored to prevent them from causing injury to passengers or damage to**

the vehicle in case of sudden braking or an accident.

- **Properly secure all cargo to help prevent it from sliding or shifting. Do not place cargo higher than the seatbacks. In a sudden stop or collision, unsecured cargo could cause personal injury.**
- **When returning the seatbacks to the upright position, be certain they are completely secured in the latched position. If they are not completely secured, passengers may be injured in an accident or sudden stop.**

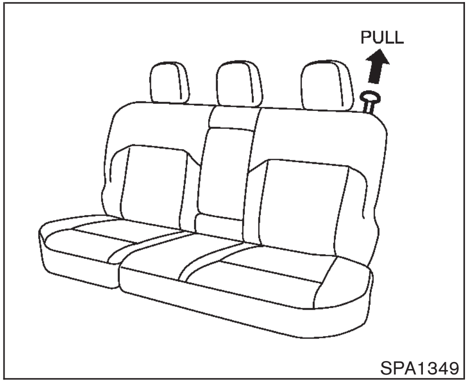

Reclining

Pull the knob to remove it from the lock plate and lean back until the desired angle is obtained. To bring the seatback forward, pull the knob and move your body forward.

The reclining feature allows adjustment of the seatback for occupants of different sizes to help obtain proper seat belt fit. (See "Precautions on seat belt usage" later in this section.) The seatback may also be reclined to allow occupants to rest when the vehicle is parked.

WARNING

- **Do not ride in a moving vehicle when the seatback is reclined. This can be dangerous. The shoulder belt will not be against your body. In an accident you could be thrown into it and receive neck or other serious injuries. You could also slide under the lap belt and receive serious internal injuries.**
- **For most effective protection when the vehicle is in motion, the seat should be upright. Always sit well back in the seat and adjust the seat belt properly. See "Seat belts" later in this section for precautions on seat belt usage.**
- **After adjustment, check to be sure the seat is securely locked.**

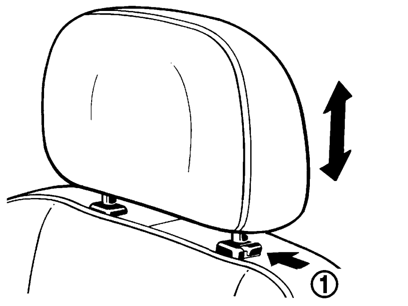

SSS0288

HEAD RESTRAINT ADJUSTMENT

To raise the head restraint, just pull it up. To lower, push the lock knob ① and push the head restraint down.

When removing the rear head restraint for seat folding etc., push the lock knob and pull up the head restraint. The removed head restraint should be securely stored.

WARNING

Head restraints should be adjusted properly as they may provide significant protection against injury in an accident. Do not remove them. Check the adjustment after someone else uses the seat.

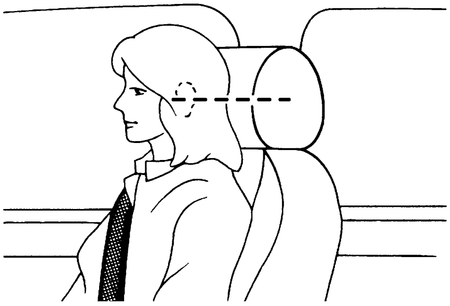

SSS0287

Adjust the head restraints so the center is level with the center of your ears.

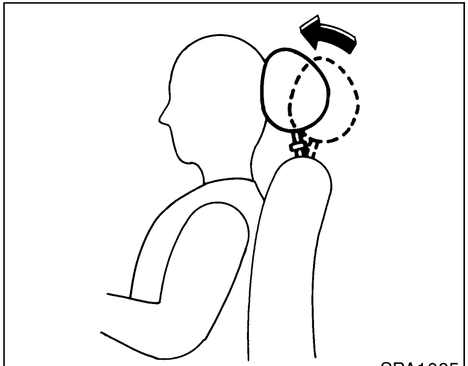

SPA1025

ACTIVE HEAD RESTRAINT (front seats)

WARNING

- **Always adjust the head restraints properly as specified in the previous section. Failure to do so can reduce the effectiveness of the active head restraint.**
- **Active head restraints are designed to supplement other safety systems. Always wear seat belts. No system can prevent all injuries in any accident.**
- **Do not attach anything to the head restraint stalks. Doing so could impair active head restraint function.**

The head restraint moves forward utilizing the force that the seatback receives from the occupant in a rear-end collision. The movement of the head restraint helps support the occupant's head by reducing its backward movement and helping absorb some of the forces that may lead to whiplash type injuries.

Active head restraints are effective for collisions at low to medium speeds in which it is said that whiplash injury occurs most.

Active head restraints operate only in certain rear-end collisions. After the collision, the head restraints return to their original positions.

Properly adjust the active head restraints as described in the previous section.

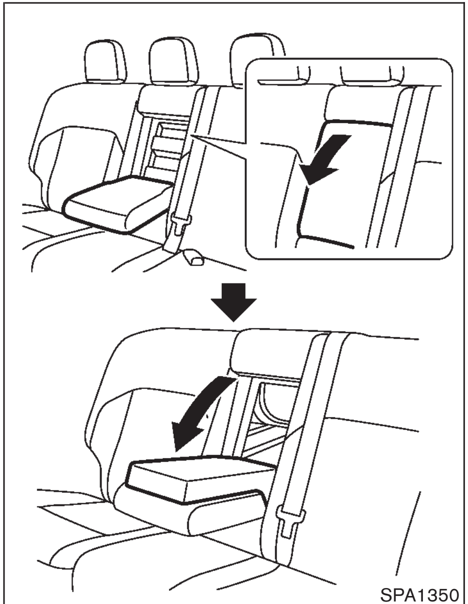

SPA1350

ARMREST

Pull the armrest forward and lay it horizontal.

The armrest see-through appears by pulling the pocket forward.

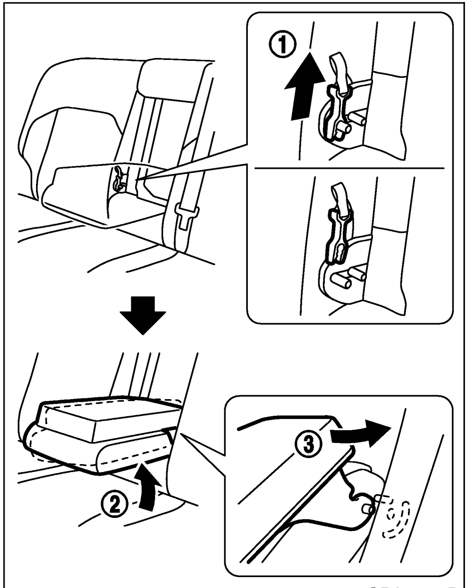

SPA1354B

Removing the armrest

You can remove the armrest when the armrest and pocket are pulled down.

1. Remove the clip from the hinge.
2. Slide the armrest and pocket toward the clip side.
3. Shift the armrest and pocket, sliding them to the right side to remove from the pin.

CAUTION

Do not sit in the rear center seat position when the armrest is removed.

SEAT BELTS

PRECAUTIONS ON SEAT BELT USAGE

If you are wearing your seat belt properly adjusted and you are sitting upright and well back in your seat, your chances of being injured or killed in an accident and/or the severity of injury may be greatly reduced. NISSAN strongly encourages you and all of your passengers to buckle up every time you drive, even if your seating position includes a supplemental air bag.

Most states, provinces or territories require that seat belts be worn at all times when a vehicle is being driven.

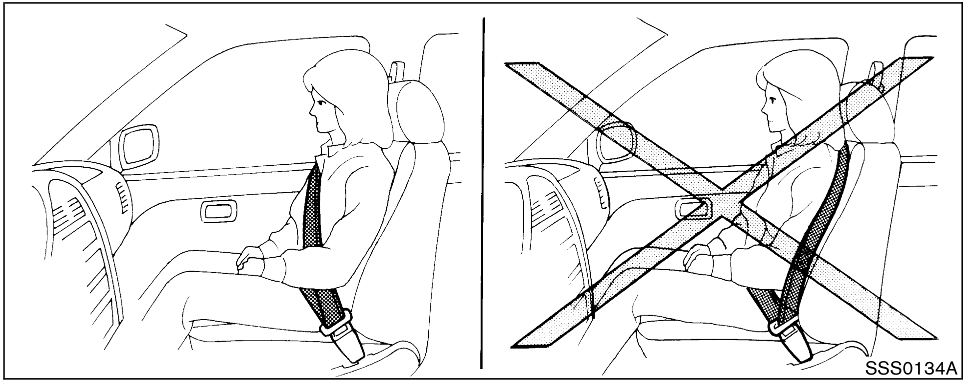

SSS0134A

WARNING

- Every person who drives or rides in this vehicle should use a seat belt at all times. Children should be properly restrained in the rear seat and, if appropriate, in a child restraint.
- The belt should be properly adjusted to a snug fit. Failure to do so may reduce the effectiveness of the entire restraint system and increase the chance or severity of injury in an accident. Serious injury or death can occur if the seat belt is not worn properly.
- Always route the shoulder belt over your shoulder and across your chest. Never run the belt behind your back under your arm or across your neck. The belt should be away from your face and neck, but not falling off your shoulder.
- Position the lap belt as low and snug as possible around the hips, not the waist. A lap belt worn too high could increase the risk of internal injuries in an accident.
- Be sure the seat belt tongue is securely fastened to the proper buckle.
- Do not wear the belt inside out or twisted. Doing so may reduce its effectiveness.
- Do not allow more than one person to use the same belt.
- Never carry more people in the vehicle than there are seat belts.
- If the seat belt warning light glows continuously while the ignition is turned ON with all doors closed and all seat belts fastened, it may indicate a malfunction in the system. Have the system checked by your NISSAN dealer.
- Once the pre-tensioner seat belt has activated, it cannot be reused and must be replaced together with the

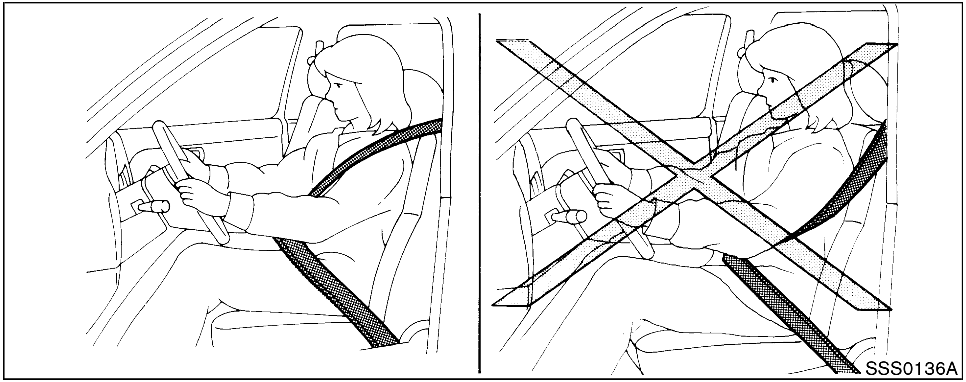
SSS0136A

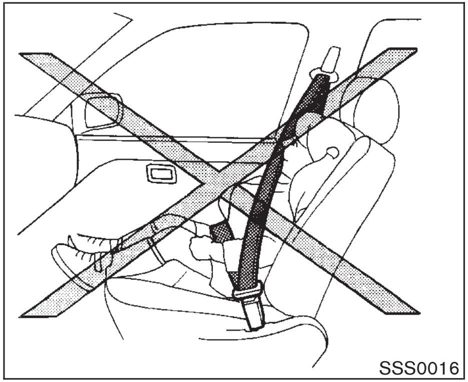
SSS0016

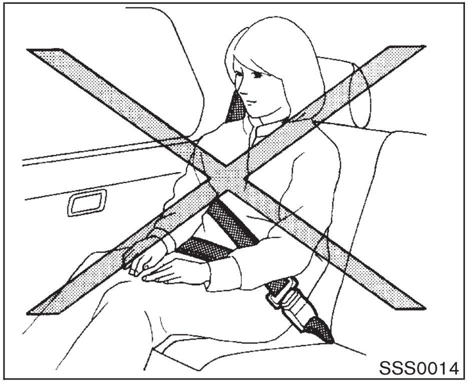
SSS0014

retractor. See your NISSAN dealer.

- Removal and installation of the pretensioner seat belt system components should be done by a NISSAN dealer.
- All seat belt assemblies including retractors and attaching hardware should be inspected after any collision by your NISSAN dealer. NISSAN recommends that all seat belt assemblies in use during a collision be replaced unless the collision was minor and the belts show no damage and continue to operate properly. Seat belt assemblies not in use during a collision should also be inspected and replaced if either damage or improper operation is noted.
- All child restraints and attaching hardware should be inspected after any collision. Always follow the restraint manufacturer's inspection instructions and replacement recommendations. The child restraints should be replaced if they are damaged.

CHILD SAFETY

Children need adults to help protect them. They need to be properly restrained.

The proper restraint depends on the child's size. Generally, infants (up to about 1 year and less than 9 kg (20 lb) should be placed in rear facing child restraints. Front facing child restraints are available for children who outgrow rear facing child restraints.

WARNING

Infants and children need special protection. The vehicle's seat belts may not fit them properly. The shoulder belt may come too close to the face or neck. The lap belt may not fit over their small hip bones. In an accident, an improperly fitting seat belt could cause serious or fatal injury. Always use appropriate child restraints.

Provinces of Canada require the use of approved child restraints for infants and small children. (See "Child restraints" later in this section.)

In addition, there are many types of child restraints available for larger children which should be used for maximum protection.

NISSAN recommends that all preteens and children be restrained in the rear seat if possible. According to accident statistics, children are safer when properly restrained in the rear seat than in the front seat.

This is especially important because your vehicle has a supplemental restraint system (air bag system) for the front passenger (see "Supplemental restraint system" later in this section for precautions).

Infants and small children

NISSAN recommends that infants and small children be placed in child restraints that comply with Canadian Motor Vehicle Safety Standards. You should choose a child restraint that fits your vehicle and always follow the manufacturer's instructions for installation and use.

Larger children

Children who are too large for child restraint systems should be seated and restrained by the seat belts which are provided.

If the child's seating position has a shoulder belt that fits close to the face or neck, the use of a booster seat (commercially available) may help overcome this. The booster seat should raise the child so that the shoulder belt is properly positioned across the top, middle portion of the shoulder and the lap belt is low on the hips. The booster seat should fit the vehicle seat and have a label certifying that it complies with Canadian Motor Vehicle Safety Standards. Once the child has grown so the shoulder belt is no longer on or near the face and neck, use the shoulder belt without the booster seat.

WARNING

Never let a child stand or kneel on any seat and do not allow a child in the cargo areas while the vehicle is moving. The child could be seriously injured or killed in an accident or a sudden stop.

PREGNANT WOMEN

NISSAN recommends that pregnant women use seat belts. The seat belt should be worn snug, and always position the lap belt as low as possible around the hips, not the waist. Place the shoulder belt over your shoulder and across your chest. Never run the lap/shoulder belt over your abdominal area. Contact your doctor for specific recommendations.

INJURED PERSONS

NISSAN recommends that injured persons use seat belts, depending on the injury. Check with your doctor for specific recommendations.

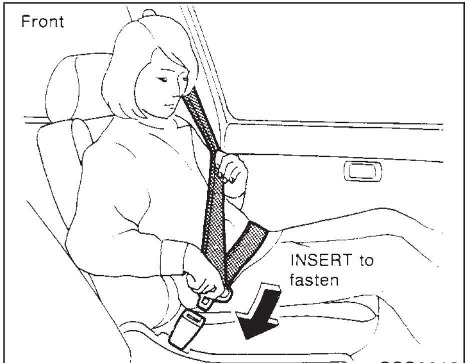

SSS0018

THREE-POINT TYPE SEAT BELT WITH RETRACTOR

WARNING

- **Every person who drives or rides in this vehicle should use a seat belt at all times.**
- **Do not ride in a moving vehicle when the seatback is reclined. This can be dangerous. The shoulder belt will not be against your body. In an accident you could be thrown into it and receive neck or other serious injuries. You could also slide under the lap belt and receive serious internal injuries.**
- **For most effective protection when the vehicle is in motion, the seat should be upright. Always sit well back in the seat and adjust the seat belt properly.**

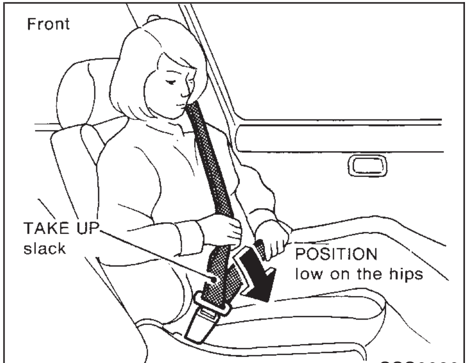

SSS0020

Fastening the seat belts

1. Adjust the seat. See "Seats" earlier in this section.
2. Slowly pull the seat belt out of the retractor and insert the tongue into the buckle until it snaps. For additional information regarding the rear center seat belt, see "Rear center seat belt" later in this section.

The retractor is designed to lock during a sudden stop or on impact. A slow pulling motion will permit the belt to move, and allow you some freedom of movement in the seat.

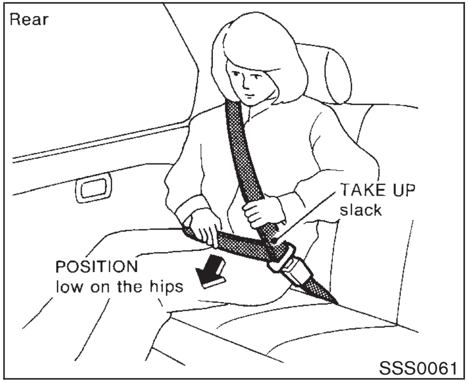

3. Position the lap belt portion **low and snug on the hips** as shown.
4. Pull the shoulder belt portion toward the retractor to take up extra slack. Make sure the shoulder belt is routed over your shoulder and across your chest.

The front passenger and rear seat belts have a cinching mechanism for child restraint installation. It is referred to as the automatic locking mode.

When the cinching mechanism is activated the seat belt cannot be withdrawn again until the seat belt tongue is detached from the buckle and fully retracted. For additional information, see "Child restraints" later in this section.

The automatic locking mode should be used only for child restraint installation. During normal seat belt use by a passenger, the locking mode should not be activated. If it is activated it may cause uncomfortable seat belt tension.

WARNING

When fastening the seat belts, be certain that seatbacks are completely secured in the latched position. If they are not completely secured, passengers may be injured in an accident or sudden stop.

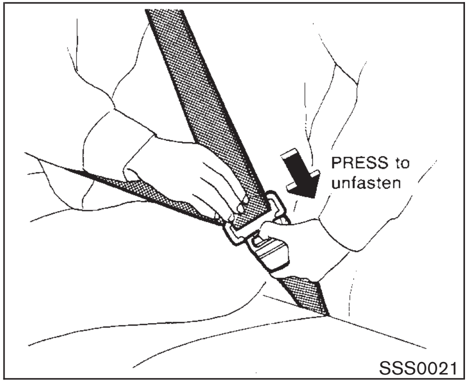

SSS0021

Unfastening the seat belts

To unfasten the belt, press the button on the buckle. The seat belt will automatically retract.

Checking seat belt operation

Your seat belt retractors are designed to lock belt movement using two separate methods:

- when the belt is pulled quickly from the retractor.
- when the vehicle slows down rapidly.

You can check their operation as follows:

- grasp the shoulder belt and pull quickly forward. The retractor should lock and restrict further belt movement.

If the retractor does not lock during this check or if you have any questions about belt operation, see your NISSAN dealer.

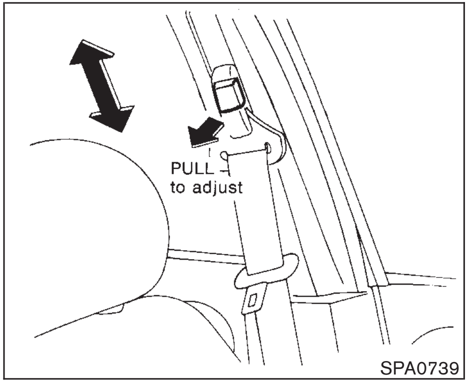

SPA0739

Shoulder belt height adjustment (For front seats)

The shoulder belt anchor height should be adjusted to the position best suited for you. (See “Precautions on seat belt usage” earlier in this section.) To lower, pull the release button, and then move the shoulder belt anchor to the desired position, so that the belt passes over the shoulder. Release the adjustment button to lock the shoulder belt anchor into position.

To raise, move the adjuster up to the desired position while pulling the button.

WARNING

- **After adjustment, release the adjustment button and try to move the shoulder belt down to make sure it is securely fixed in position.**
- **The shoulder belt anchor height should be adjusted to the position best for you. Failure to do so may reduce the effectiveness of the entire restraint system and increase the chance or severity of injury in an accident.**

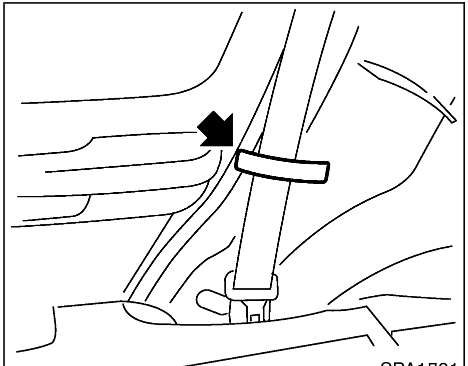

SPA1731

Seat belt hook (For rear seats)

When folding down the rear seat, hook the rear seat belt at the belt hook.

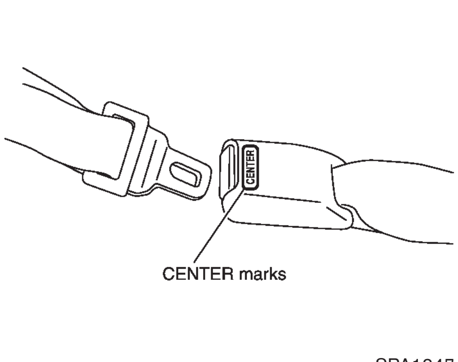

SPA1347

REAR CENTER SEAT BELT

The center seat belt buckle is identified by the CENTER mark. The center seat belt tongue can be fastened **only** into the center seat belt buckle.

SEAT BELT EXTENDERS

If, because of body size or driving position, it is not possible to properly fit the lap-shoulder belt and fasten it, an extender is available. The extender adds approximately 200 mm (8 inches) of length and may be used for either the driver or front passenger seating position. See your NISSAN dealer for assistance if the extender is required.

WARNING

- **Only NISSAN belt extenders, made by the same company which made the original equipment belts, should be used with NISSAN belts.**
- **Adults and children who can use the standard seat belt should not use an extender. Such unnecessary use could result in serious personal injury in the event of an accident.**
- **Never use seat belt extenders to install child restraints. If the child restraint is not secured properly, the child could be seriously injured in a collision or a sudden stop.**

SEAT BELT MAINTENANCE

- **To clean the seat belt webbings,** apply a mild soap solution or any solution recommended for cleaning upholstery or carpets. Then brush the webbing, wipe it with a cloth and allow it to dry in the shade. Do not allow the seat belts to retract until they are completely dry.
- If dirt builds up in the shoulder belt guide of the seat belt anchors, the seat belts may retract slowly. Wipe the shoulder belt guide with a clean, dry cloth.
- **Periodically check to see that the seat belt and the metal components** such as buckles, tongues, retractors, flexible wires and anchors work properly. If loose parts, deterioration, cuts or other damage on the webbing is found, the entire belt assembly should be replaced.

CHILD RESTRAINTS

PRECAUTIONS ON CHILD RESTRAINTS

WARNING

- **Infants and small children should always be placed in an appropriate child restraint while riding in the vehicle. Failure to use a child restraint can result in serious injury or death.**
- **Infants and small children should never be carried on your lap. It is not possible for even the strongest adult to resist the forces of a severe accident. The child could be crushed between the adult and parts of the vehicle. Also, do not put the same seat belt around both your child and yourself.**
- **Never install a rear facing child restraint in the front seat. An inflating supplemental air bag could seriously injure or kill your child. A rear facing child restraint must only be used in the rear seat.**

- **NISSAN recommends that the child restraint be installed in the rear seat. According to accident statistics, children are safer when properly restrained in the rear seat than in the front seat.**
- **An improperly installed child restraint could lead to serious injury or death in an accident.**

In general, child restraints are designed to be installed with the lap portion of a three-point type seat belt. In addition, this vehicle is equipped with a universal child restraint lower anchor system, referred to as the LATCH (Lower Anchors and Tethers for CHildren) system. Some child restraints include two rigid or webbing-mounted attachments that can be connected to these lower anchors. For details, see "LATCH (Lower Anchors and Tethers for CHildren) SYSTEM" later in this section.

Child restraints for infants and children of various sizes are offered by several manufacturers. When selecting any child restraint, keep the following points in mind:

- choose only a restraint with a label certifying that it complies with Canadian Motor Vehicle Safety Standard 213 or Federal Motor Vehicle Safety Standard 213.
- check the child restraint in your vehicle to be sure it is compatible with the vehicle's seat and seat belt system.
- if the child restraint is compatible with your vehicle, place your child in the child restraint and check the various adjustments to be sure the child restraint is compatible with your child. Always follow all recommended procedures.

Canadian provinces and all US states require that infants and small children be restrained in approved child restraints at all times while the vehicle is being operated.

WARNING

- **Improper use of a child restraint can result in increased injuries for both the infant or child and other occupants in the vehicle.**
- **Follow all of the child restraint manufacturer's instructions for installation and use. When purchasing a child restraint, be sure to select one which will fit your child and vehicle. It may not be possible to properly install some types of child restraints in your vehicle.**
- **If the child restraint is not anchored properly, the risk of a child being injured in a collision or a sudden stop greatly increases.**
- **Adjustable seatbacks should be positioned to fit the child restraint, but as upright as possible.**
- **After attaching the child restraint, test it before you place the child in it. Tilt it from side to side. Try to tug it forward and check to see if the belt holds the restraint in place. The child restraint should not move more than 25 mm (1 inch). If the restraint is not secure, tighten the belt as necessary, or put the restraint in another seat and test it again.**
- **For a front facing child restraint, check to make sure the shoulder belt does not go in front of the child's face**

or neck. If it does, put the shoulder belt behind the child restraint. If you must install a front facing child restraint in the front seat, see instructions later in this section.

- **When your child restraint is not in use, keep it secured with a seat belt to prevent it from being thrown around in case of a sudden stop or accident.**

CAUTION

Remember that a child restraint left in a closed vehicle can become very hot. Check the seating surface and buckles before placing your child in the child restraint.

INSTALLATION ON REAR SEAT CENTER OR OUTBOARD POSITIONS

WARNING

- **The three-point rear seat belts on your vehicle are equipped with a locking mode retractor which must be used when installing a child restraint.**
- **Failure to do so will result in the child restraint not being properly secured. It could tip over or otherwise be unsecured and cause injury to the child in a sudden stop or collision.**

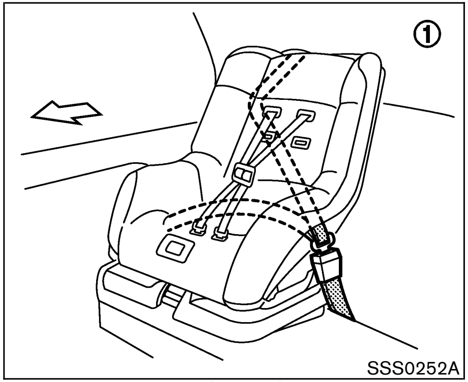

Front Facing (outboard) — step 1

Front facing

When you install a child restraint in a rear outboard or center seat, follow these steps:

1. Position the child restraint on the seat. It can be placed in a front facing direction, depending on the size of the child. Adjust the head restraint to its highest position or remove it if the child restraint uses a top tether strap. Always follow the restraint manufacturer’s instructions.

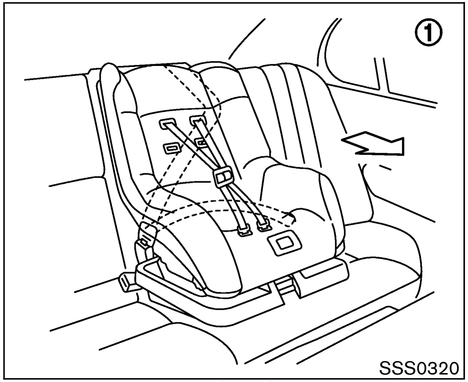

Front Facing (center) — step 1

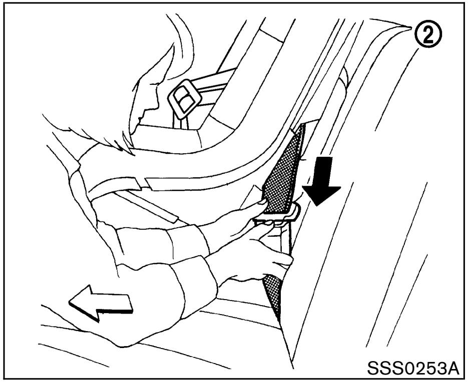

Front Facing — step 2

2. Route the seat belt tongue through the child restraint and insert it into the buckle until you hear and feel the latch engage.
   Be sure to follow the child restraint manufacturer's instructions for belt routing.

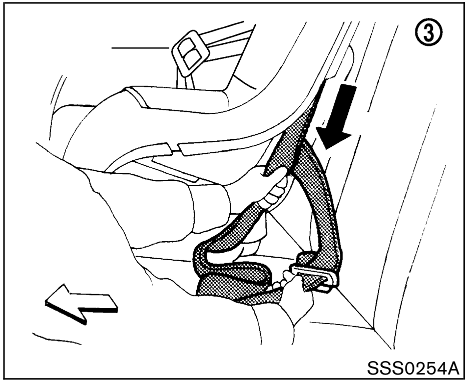

Front Facing — step 3

3. Pull on the shoulder belt until all of the belt is fully extended. At this time, the belt retractor is in the automatic locking mode (child restraint mode). It reverts back to emergency locking mode when the belt is fully retracted.

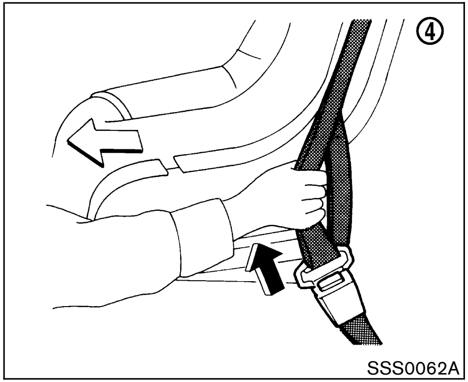

Front Facing — step 4

4. Allow the belt to retract. Pull up on the belt to remove any slack in the belt.

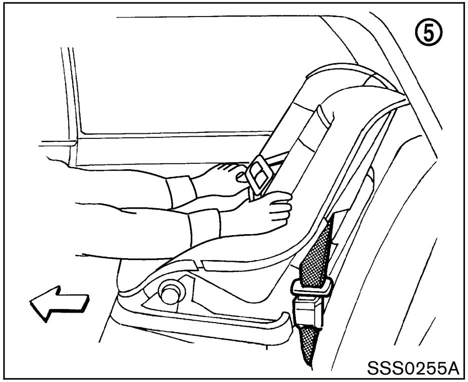

Front Facing — step 5

5. Before placing the child in the child restraint, use force to tilt the child restraint from side to side, and tug it forward to make sure that it is securely held in place. It should not move more than 25 mm (1 inch).

6. Check that the retractor is in the automatic locking mode by trying to pull more belt out of the retractor. If you cannot pull any more belt webbing out of the retractor, the belt is in the automatic locking mode.

7. Check to make sure that the child restraint is properly secured prior to each use. If the belt is not locked, repeat steps 3 through 6.

After the child restraint is removed and the seat belt is allowed to wind back into the retractor, the automatic locking mode (child restraint mode) is canceled; the seat belt only locks during a sudden stop or impact.

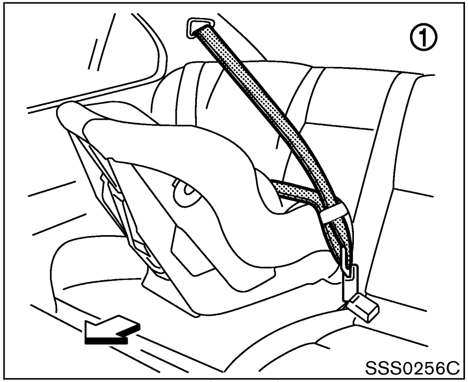

Rear Facing (outboard) — step 1

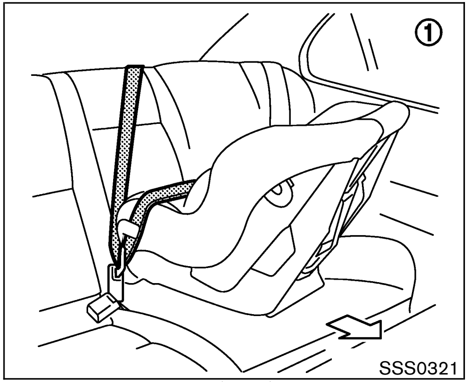

Front Facing (center) — step 1

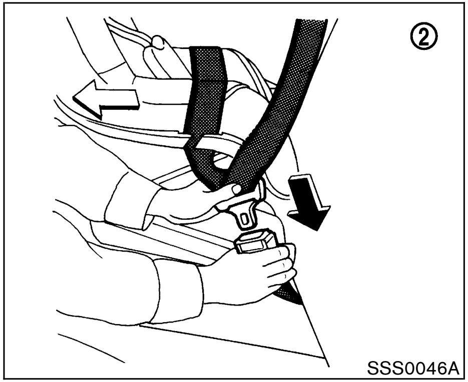

Rear Facing — step 2

Rear facing

When you install a child restraint in a rear outboard or center seat, follow these steps:

1. Position the child restraint on the seat. The direction of the child restraint depends on the type of the child restraint and the size of the child. Always follow the restraint manufacturer's instructions.

2. Route the seat belt tongue through the child restraint and insert it into the buckle until you hear and feel the latch engage.
   Be sure to follow the child restraint manufacturer's instructions for belt routing.

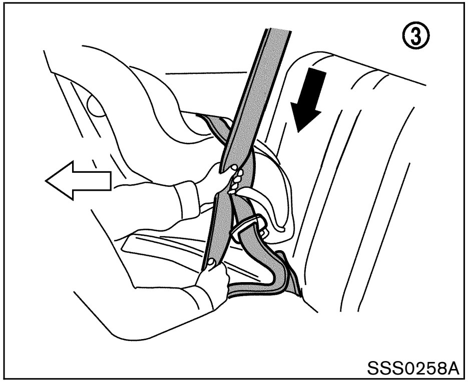

Rear Facing — step 3

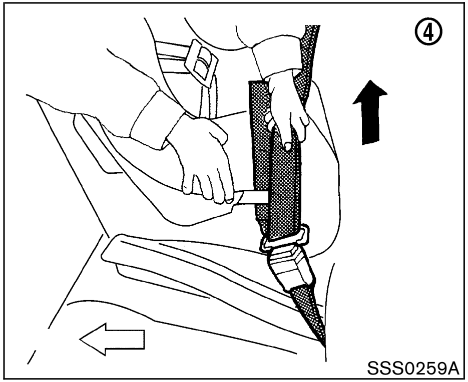

Rear Facing — step 4

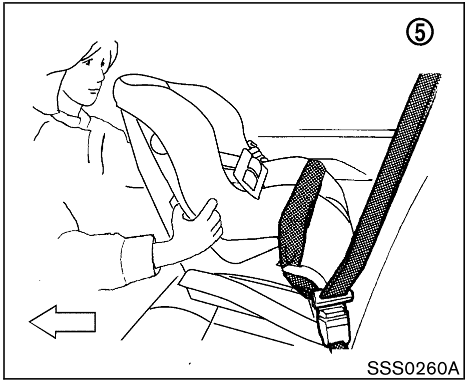

Rear Facing — step 5

3. Pull on the shoulder belt until all of the belt is fully extended. At this time, the belt retractor is in the automatic locking mode (child restraint mode). It reverts back to emergency locking mode when the belt is fully retracted.

4. Allow the belt to retract. Pull up on the belt to remove any slack in the belt.

5. Before placing the child in the child restraint, use force to tilt the child restraint from side to side, and tug it forward to make sure that it is securely held in place. It should not move more than 25 mm (1 inch).

6. Check that the retractor is in the automatic locking mode by trying to pull more belt out of the retractor. If you cannot pull any more belt webbing out of the retractor, the belt is in the automatic locking mode.

7. Check to make sure that the child restraint is properly secured prior to each use. If the belt is not locked, repeat steps 3 through 6.

After the child restraint is removed and the seat

belt is allowed to wind back into the retractor, the automatic locking mode (child restraint mode) is canceled; the seat belt only locks during a sudden stop or impact.

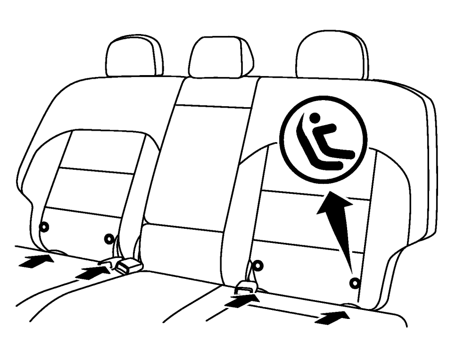

SSS0329

LATCH (LOWER ANCHORS AND TETHERS FOR CHILDREN) SYSTEM

WARNING

- **Attach LATCH system compatible child restraints only at the locations shown. If a child restraint is not secured properly, your child could be seriously injured or killed in an accident.**
- **Do not secure a child restraint in the center rear seating position using the child restraint lower anchors. The child restraint will not be secured properly.**
- **The LATCH system anchors are designed to withstand only those loads imposed by correctly fitted child restraints. Under no circumstance are they to be used for adult seat belts or harnesses.**

Some child restraints include two rigid or webbing-mounted attachments that can be connected to two anchors located at certain seating positions in your vehicle. This system is known as the LATCH (Lower Anchors and Tethers for CHildren) system. This system may also be referred to as the ISOFIX or ISOFIX compatible system. With this system, you do not have to use a vehicle seat belt to secure the child restraint. Your vehicle is equipped with special anchor points that are used with LATCH system compatible child restraints. Check your child restraint for a label stating that it is compatible with the LATCH system. This information may also be in the child restraint owner's manual. If you have such a child restraint, refer to the illustration for

the seating positions equipped with LATCH system anchors which can be used to secure the child restraint.

The LATCH system anchors are located at the rear of the seat cushion near the seatback. A label is attached to the seatback to help you locate the LATCH system anchors.

Some child restraints may also require the use of a top tether strap. See "Top tether strap child restraint" later in this section for installation instructions.

When installing a child restraint, carefully read and follow the instructions in this manual and those supplied with the child restraint.

When you install a LATCH system compatible child restraint to the lower anchor attachments, follow these steps.

WARNING

Inspect the lower anchors by inserting your fingers into the lower anchor area and feeling to make sure there are no obstructions over the LATCH system anchors, such as seat belt webbing or seat cushion material. If a seat belt buckle hinders installation of the LATCH system, remove the buckle from the buckle fixing band of the seatback. The child restraint will not be secured properly if the LATCH system anchors are obstructed.

1. **To install the LATCH system compatible child restraint, insert the child restraint LATCH system anchor attachments into the anchor points on the rear. If the child restraint is equipped with a top tether, see "Top tether strap child restraint" later in this section for installation instructions.**

2. **After attaching the child restraint and before placing the child in it, use force to tilt the child restraint from side to side and tug it forward to make sure that the child restraint is securely held in place. It should not move more than 25 mm (1 inch).**

3. **Check to make sure that the child restraint is properly secured prior to each use.**

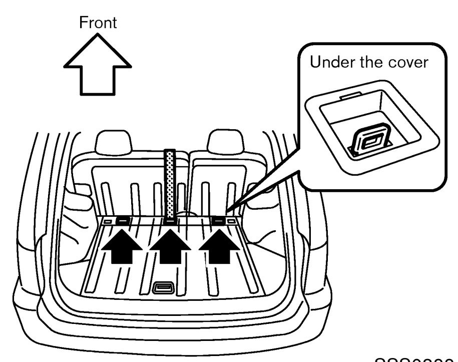

SSS0322

TOP TETHER STRAP CHILD RESTRAINT

WARNING

- **The child restraint anchor points are designed to withstand only those loads imposed by correctly fitted child restraints. Under no circumstances are they to be used for adult seat belts or harnesses.**

- **After removing a rear seat head restraint for top tether installation, store it securely to prevent it from causing injury to passengers or damage to the vehicle in case of sudden braking or an accident. Always replace it and adjust properly when top tether is no longer in use.**
- **The top tether strap may be damaged by contact with the tonneau cover (if so equipped) or items in the cargo area. Remove the tonneau cover from the vehicle or secure it and any cargo. Your child could be seriously injured or killed in a collision if the top tether strap is damaged.**

If your child restraint has a top tether strap, it must be secured to the anchor point provided behind its position.

First, remove the head restraint from the seatback and adjust the seatback so that it is as upright as possible. Then secure the child restraint with the rear seat belt or the LATCH system (outboard positions), as applicable. Remove the anchor cover from the anchor point as illustrated. Keep the removed cover in a secure place to prevent loss or damage.

Remove the head restraint from the seatback. Store it in a secure place. Position the top tether strap over the top of the seatback and secure it to the tether anchor bracket that provides the straightest installation. Tighten the tether strap according to the manufacturer's instruction to remove any slack.

For best child restraint fit, see the child restraint installation instructions in this section and the child restraint manufacturer's instructions.

Anchor point locations

Anchor points are located as illustrated.

If you have any questions when installing a top strap child restraint on the rear seat, consult your NISSAN dealer for details.

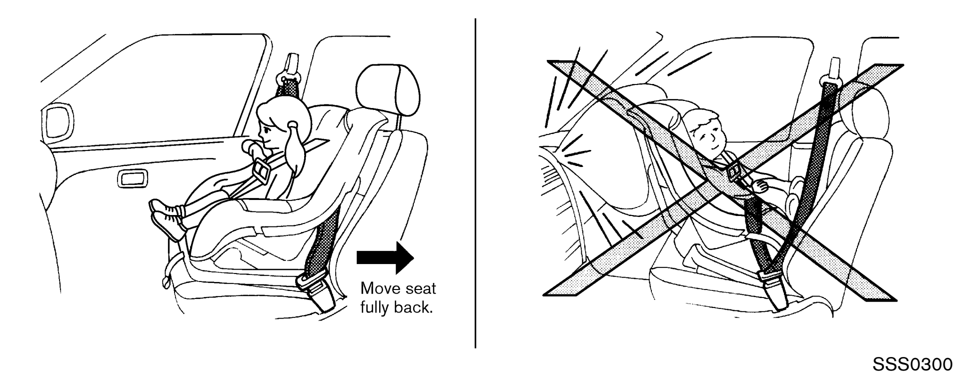

INSTALLATION ON FRONT PASSENGER SEAT

WARNING

- **Never install a rear facing child restraint in the front passenger seat. Supplemental air bags inflate with great force. A rear facing child restraint could be struck by the supplemental air bag in a crash and could seriously injure or kill your child.**
- **NISSAN recommends that child restraints be installed in the rear seat. However, if you must install a front facing child restraint in the front passenger seat, move the passenger seat to the rearmost position.**
- **A child restraint with a top tether strap should not be used in the front passenger seat.**
- **The three-point belt in your vehicle is equipped with a locking mode retractor which must be used when installing a child restraint.**
- **Failure to use the retractor's locking mode will result in the child restraint not being properly secured. The child restraint could tip over or otherwise be unsecured and cause injury to the child in a sudden stop or collision.**

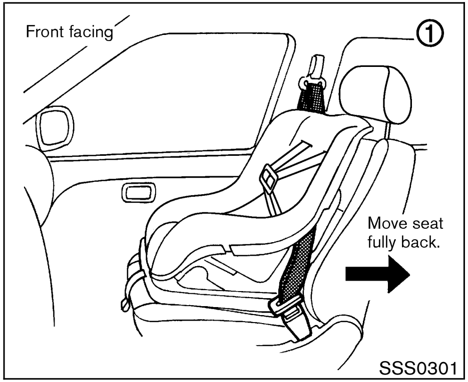

Front facing

If you must install a child restraint in the front seat, follow these steps:

1. Position the child restraint on the front passenger seat. **It should be placed in a front facing direction only.** Move the seat to the rearmost position. Adjust the head restraint to its highest position. Always follow the child restraint manufacturer's instructions. **Child restraints for infants must be used in the rear facing direction and therefore must not be used in the front seat.**

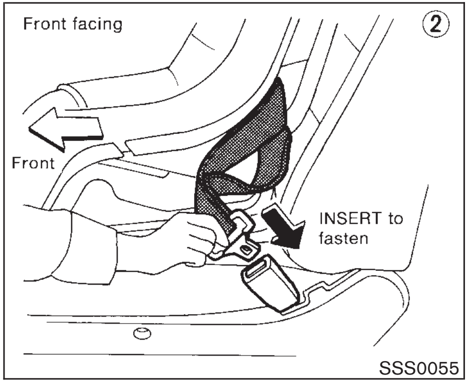

2. Route the seat belt tongue through the child restraint and insert it into the buckle until you hear and feel the latch engage. Be sure to follow the child restraint manufacturer's instructions for belt routing.

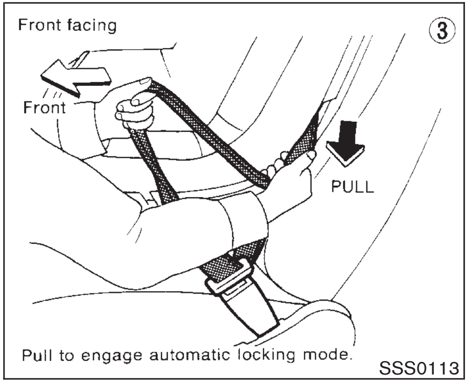

3. Pull on the shoulder belt until all of the belt is fully extended. At this time, the belt retractor is in the automatic locking mode (child restraint mode). It reverts back to emergency locking mode when the belt is fully retracted.

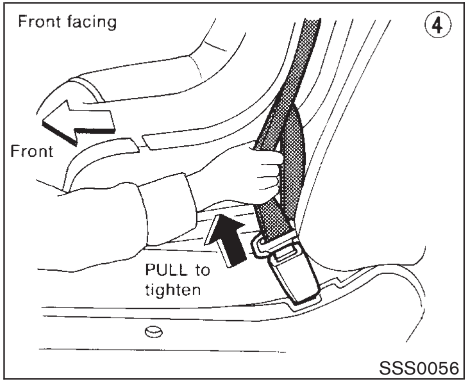

4. Allow the belt to retract. Pull up on the belt to remove any slack in the belt.

5. Before placing the child in the child restraint, use force to tilt the child restraint from side to side, and tug it forward to make sure that it is securely held in place. It should not move more than 25 mm (1 inch).
6. Check that the retractor is in the automatic locking mode by trying to pull more belt out of the retractor. If you cannot pull any more belt webbing out of the retractor, the belt is in the automatic locking mode.
7. Check to make sure that the child restraint is properly secured prior to each use. If the lap belt is not locked, repeat steps 3 through 6.

After the child restraint is removed and the seat belt is allowed to wind back into the retractor, the automatic locking mode (child restraint mode) is canceled; the seat belt only locks during a sudden stop or impact.

SUPPLEMENTAL RESTRAINT SYSTEM

PRECAUTIONS ON SUPPLEMENTAL RESTRAINT SYSTEM

This Supplemental Restraint System (SRS) section contains important information concerning the driver and passenger front impact supplemental air bags, front seat side-impact supplemental air bags and front seat pre-tensioner seat belts.

Supplemental front impact air bag system: This system can help cushion the impact force to the face and chest of the driver and front passenger in certain frontal collisions.

Supplemental side-impact air bag system (if so equipped): This system can help cushion the impact force to the chest area of the driver and front passenger in certain side impact collisions. The front seat side-impact supplemental air bags are designed to inflate on the side where the vehicle is impacted.

These supplemental restraint systems are designed to **supplement** the crash protection provided by the driver and passenger seat belts and are **not a substitute** for them. Seat belts should always be correctly worn and the occupant seated a suitable distance away from the steering wheel, instrument panel, door finishers. (See “Seat belts” earlier in this section for instructions and precautions on seat belt usage.)

After turning the ignition key to the ON position, the supplemental air bag warning light illuminates. The supplemental air bag warning light will turn off after about 7 seconds if the systems are operational.

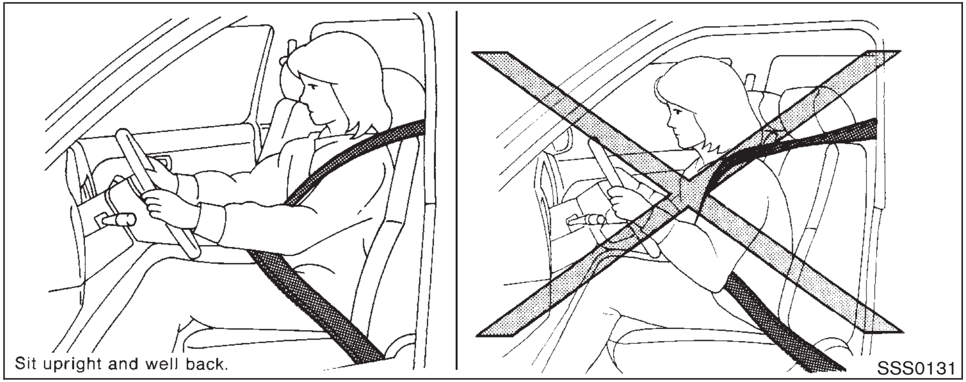

WARNING

- The supplemental front air bags ordinarily will not inflate in the event of a side impact, rear impact, roll over, or lower severity frontal collision. Always wear your seat belts to help reduce the risk or severity of injury in various kinds of accidents.
- The seat belts and the supplemental front air bags are most effective when you are sitting well back and upright in the seat. Front air bags inflate with great force. If you are unrestrained, leaning forward, sitting sideways or out of position in any way, you are at greater risk of injury or death in a crash. You may also receive serious or fatal injuries from the supplemental front air bag if you are up against it when it inflates. Always sit back against the seatback and as far away as practical from the steering wheel or instrument panel. Always use the seat belts.
- Keep hands on the outside of the steering wheel. Placing them inside the steering wheel rim could increase the risk that they are injured when the supplemental front air bag inflates.

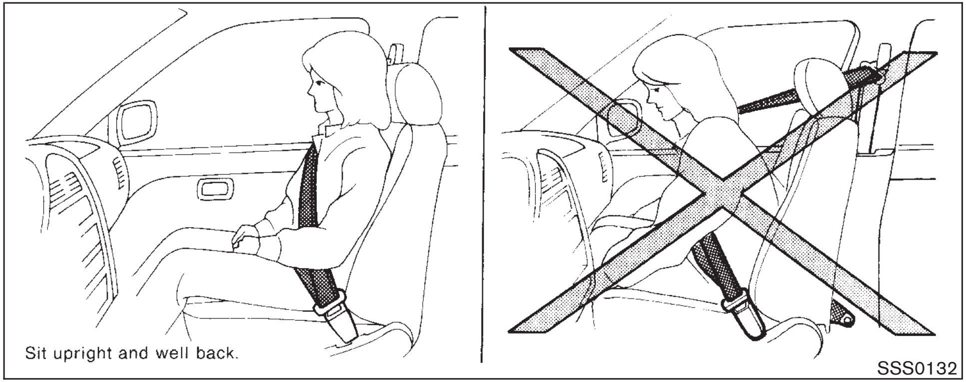
Sit upright and well back.
SSS0132

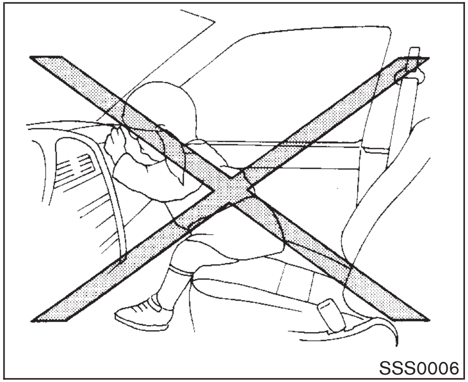
SSS0006

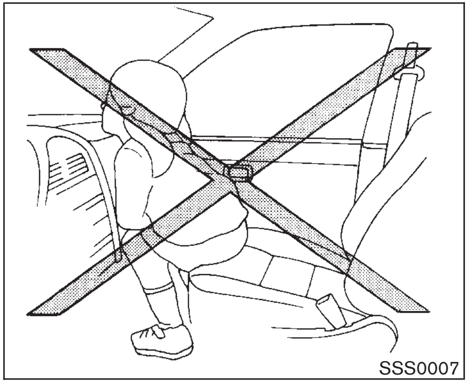
SSS0007

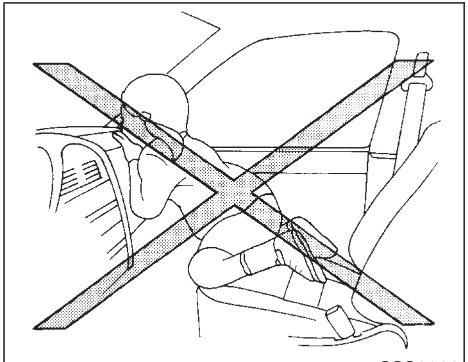
SSS0008

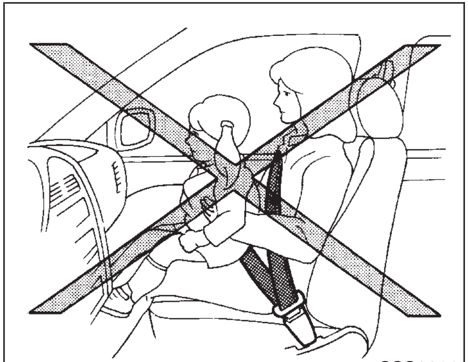
SSS0099

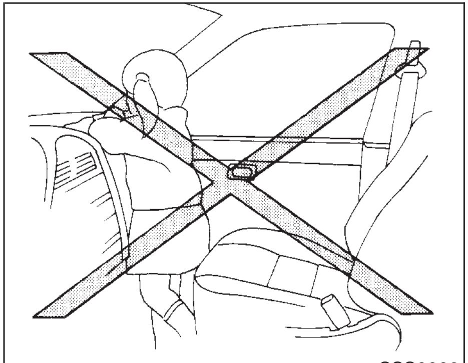
SSS0009

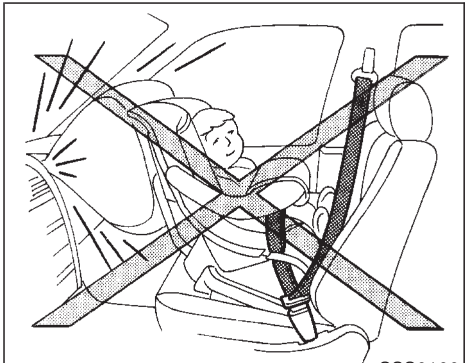
SSS0100

WARNING

- **Never let children ride unrestrained or extend their hands or face out of the window. Do not attempt to hold them in your lap or arms. Some examples of dangerous riding positions are shown in the previous illustrations. Preteens and children should be properly restrained in the rear seat if possible.**
- **Children may be severely injured or killed when the supplemental front air bags or side-impact air bags inflate if they are not properly restrained. Preteens and children should be properly restrained in the rear seat if possible.**
- **Also never install a rear facing child restraint in the front seat. An inflating supplemental front air bag could seriously injure or kill your child. For additional information, see "Child restraints" earlier in this section.**

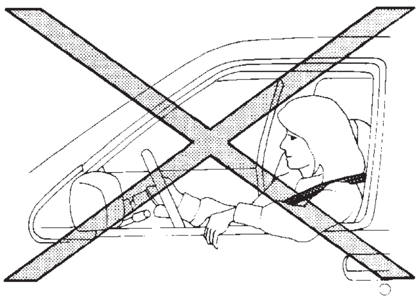

SSS0101

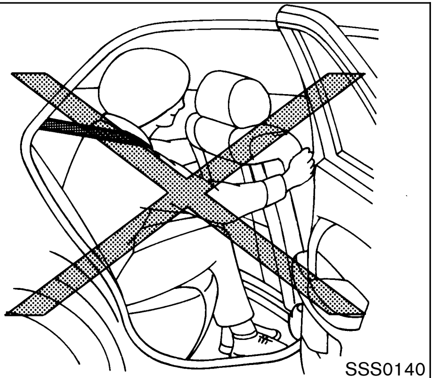
SSS0140

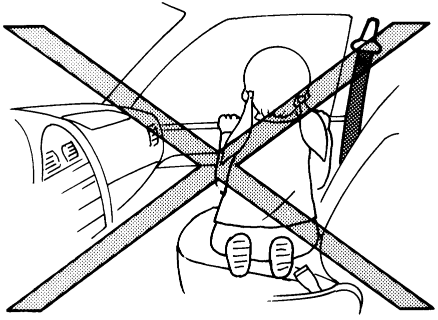
SSS0159

WARNING

Supplemental side air bag:

- **The supplemental side air bag ordinarily will not inflate in the event of a frontal impact, rear impact, rollover or lower severity side collision. Always wear your seat belts to help reduce the risk or severity of injury in various kinds of accidents.**
- **The seat belts and the supplemental side air bag are most effective when you are sitting well back and upright in the seat. The side air bag inflates with great force. Do not allow anyone to place their hand, leg or face near the side air bag on the side of the seatback of the front seat or near the side roof rails. Do not allow anyone sitting in the front seat or rear outboard seats to extend their hand out of the window or lean against the door. Some examples of dangerous riding positions are shown in the previous illustrations.**
- **When sitting in the rear seat, do not hold onto the seatback of the front seat. If the supplemental side air bag inflates, you may be seriously injured. Be especially careful with children, who should always be properly restrained.**

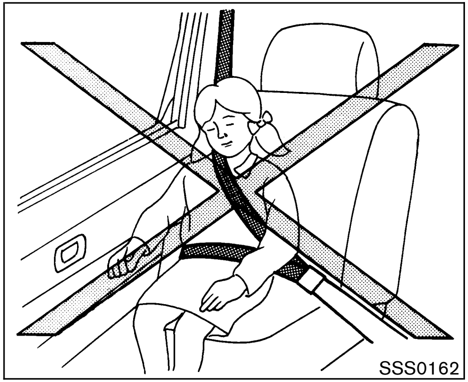

SSS0162

- **Do not use seat covers on the front seatbacks. They may interfere with supplemental side air bag inflation.**

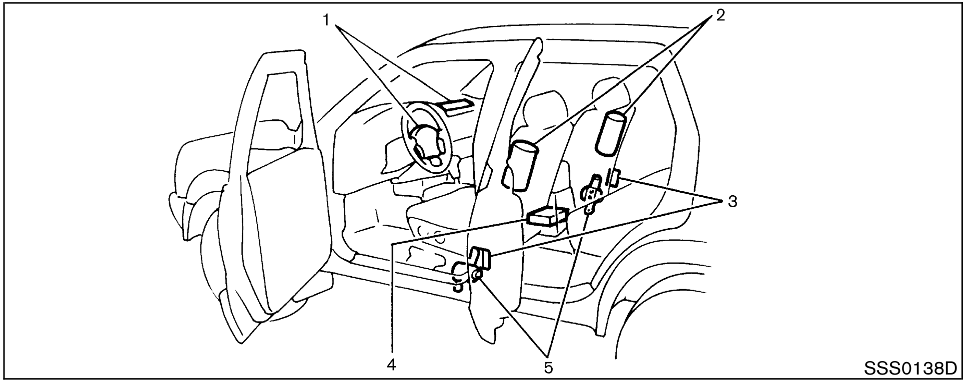

SSS0138D

1. Supplemental front air bag modules
2. Supplemental side air bag modules (if so equipped)
3. Satellite sensors
4. Diagnosis sensor unit
5. Seat belt pre-tensioner retractor

Supplemental front air bag system

The driver supplemental air bag is located in the center of the steering wheel; the front passenger supplemental air bag is mounted in the instrument panel above the glove box. These systems are designed to meet certification requirements under Canadian regulations. **All of the information, cautions and warnings in this manual still apply and must be followed.** The supplemental front air bags are designed to inflate in higher severity frontal collisions, although they may inflate if the forces in another type of collision are similar to those of a higher severity frontal impact. They may not inflate in certain frontal collisions. Vehicle damage (or lack of it) is not always an indication of proper supplemental air bag operation.

When the supplemental front air bag inflates, a fairly loud noise may be heard, followed by release of smoke. This smoke is not harmful and does not indicate a fire. Care should be taken not to inhale it, as it may cause irritation and choking. Those with a history of a breathing condition should get fresh air promptly.

Supplemental front air bags, along with the use of seat belts, helps to cushion the impact force on the face and chest of the front occupants. They can help save lives and reduce serious injuries. However, an inflating front air bag may cause facial abrasions or other injuries. Front air bags do not provide restraint to the lower body.

The seat belts should be correctly worn and the driver and passenger seated upright as far as practical away from the steering wheel or instrument panel. The supplemental front air bags inflate quickly in order to help protect the front occupants. Because of this, the force of the front air bag inflating can increase the risk of injury if the occupant is too close to, or is against the air bag module during inflation. The air bag will deflate quickly after the collision is over.

After turning the ignition key to the ON position, the supplemental air bag warning light illuminates. The supplemental air bag warning light will turn off after about 7 seconds if the system is operational.

WARNING

- **Do not place any objects on the steering wheel pad or on the instrument panel. Also, do not place any objects between any occupant and the steering wheel or instrument panel. Such objects may become dangerous projectiles and cause injury if the supplemental front air bag inflates.**
- **Right after inflation, several air bag system components will be hot. Do not touch them; you may severely burn yourself.**
- **No unauthorized changes should be made to any components or wiring of the supplemental front air bag system. This is to prevent accidental inflation of the air bag or damage to the air bag system.**
- **Do not make unauthorized changes to your vehicle's electrical system, suspension system or front end structure. This could affect proper operation of the supplemental air bag system.**
- **Tampering with the supplemental front air bag system may result in serious personal injury. Tampering includes changes to the steering wheel and the instrument panel assembly by placing material over the steering wheel pad, above the dash-**

board, or by installing additional trim material around the air bag system.

- **Work around and on the supplemental front air bag system should be done by a NISSAN dealer. Installation of electrical equipment should also be done by a NISSAN dealer. The yellow and orange Supplemental Restrain System (SRS) wiring and connectors should not be modified or disconnected. Unauthorized electrical test equipment and probing de vices should not be used on the air bag system.**
- **A cracked windshield should be replaced immediately by a qualified repair facility. A cracked windshield could affect inflation of the supplemental air bag system.**
- **The SRS wiring harness connectors are yellow and orange for easy identification.**

When selling your vehicle, we request that you inform the buyer about the supplemental front air bag system and guide the buyer to the appropriate sections in this Owner's Manual.

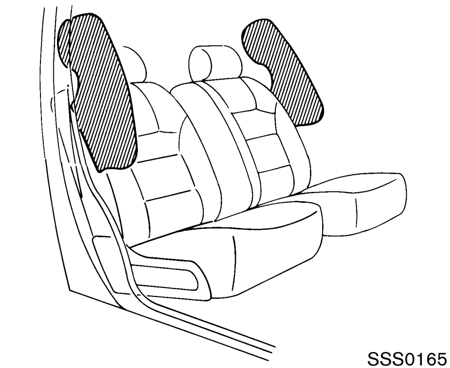

SSS0165

Supplemental side air bag system (if so equipped)

The supplemental side air bags are located in the outside of the seatback of the front seats. **All of the information, cautions and warnings in this manual still apply and must be followed.** The supplemental side air bags are designed to inflate in higher severity side collisions on the side where the vehicle is impacted, although they may inflate if the forces in another type of collision are similar to those of a higher severity side impact. They are designed to inflate on the side where the vehicle is impacted. They may not inflate in certain side collisions. Vehicle damage (or lack of it) is not always an indication of proper supplemental side air bag operation.

When the supplemental side air bag inflates, a fairly loud noise may be heard, followed by release of smoke. This smoke is not harmful and does not indicate a fire. Care should be taken not to inhale it, as it may cause irritation and choking. Those with a history of a breathing condition should get fresh air promptly.

Supplemental side air bags, along with the use of seat belts, help to cushion the impact force on the head and the chest of the front occupants. They can help save lives and reduce serious injuries. However, an inflating side air bag may cause abrasions or other injuries. Supplemental side air bags do not provide restraint to the lower body.

The seat belts should be correctly worn and the driver and passenger seated upright as far as practical away from the side air bag. Rear seat passengers should be seated as far away as practical from the door finishers and side roof rails. The side air bags inflate quickly in order to help protect the front occupants. Because of this, the force of the side air bag inflating can increase the risk of injury if the occupant is too close to, or is against, these air bag modules during inflation. The side air bag will deflate quickly after the collision is over.

After turning the ignition key to the ON

position, the supplemental air bag warning light illuminates. The air bag warning light will turn off after about 7 seconds if the systems are operational.

WARNING

- **Do not place any objects near the seatback of the front seats. Also, do not place any objects (an umbrella, bag, etc.) between the front door finisher and the front seat. Such objects may become dangerous projectiles and cause injury if the side air bag inflates.**
- **Right after inflation, several side air bag system components will be hot. Do not touch them; you may severely burn yourself.**
- **No unauthorized changes should be made to any components or wiring of this side air bag system. This is to prevent accidental inflation of the side air bag or damage to the side air bag system.**
- **Do not make unauthorized changes to your vehicle's electrical system, suspension system or side panel. This could affect proper operation of the supplemental side air bag system.**
- **Tampering with the supplemental system may result in serious personal injury. For example, do not change the front seat by placing material near the seatback or by installing additional trim material, such as seat covers, around the side air bag.**
- **Work around and on the side air bag system should be done by a NISSAN dealer. Installation of electrical equipment should also be done by a NISSAN dealer. The SRS wiring harnesses* should not be modified or disconnected. Unauthorized electrical test equipment and probing devices should not be used on the side air bag system.**

*** The SRS wiring harnesses are covered with yellow and orange insulation either just before the harness connectors or over the complete harness for easy identification.**

When selling your vehicle, we request that you inform the buyer about the side air bag system and guide the buyer to the appropriate sections in this Owner's Manual.

Pre-tensioner seat belt system (For front seats)

WARNING

- **The pre-tensioner seat belt cannot be reused after activation. It must be replaced together with the retractor as a unit.**
- **If the vehicle becomes involved in a frontal collision but the pre-tensioner is not activated, be sure to have the pre-tensioner system checked and, if necessary, replaced by your NISSAN dealer.**

- **No unauthorized changes should be made to any components or wiring of the pre-tensioner seat belt system. This is to prevent accidental activation of the pre-tensioner seat belt or damage to the pre-tensioner seat belt operation. Tampering with the pre-tensioner seat belt system may result in serious personal injury.**
- **Work around and on the pretensioner seat belt system should be done by a NISSAN dealer. Installation of electrical equipment should also be done by a NISSAN dealer. Unauthorized electrical test equipment and probing devices should not be used on the pretensioner seat belt system.**
- **If you need to dispose of the pretensioner or scrap the vehicle, contact a NISSAN dealer. Correct pretensioner disposal procedures are set forth in the appropriate NISSAN Service Manual. Incorrect disposal procedures could cause personal injury.**

The front seat pre-tensioner seat belt system activates in conjunction with the supplemental front air bag. Working with the seat belt retractor, it helps tighten the seat belt the instant the vehicle becomes involved in certain types of collisions, helping to restrain front seat occupants.

The pre-tensioner is encased with the seat belt's retractor. These seat belts are used the same as conventional seat belts.

When the pre-tensioner seat belt activates, smoke is released and a loud noise may be heard. The smoke is not harmful, but care should be taken not to inhale it as it may cause irritation and choking. Those with a history of a breathing condition should get fresh air promptly.

If any abnormality occurs in the pre-tensioner seat belt system, the supplemental air bag warning light will not come on, will flash intermittently or will turn on for 7 seconds and remain on after the ignition key has been turned to the ON or START position. In this case, the pre-tensioner seat belt may not function properly. They must be checked and repaired. Take your vehicle to the nearest NISSAN dealer.

When selling your vehicle, we request that you inform the buyer about the pre-tensioner seat belt system and guide the buyer to the appropriate sections in this Owner's Manual.

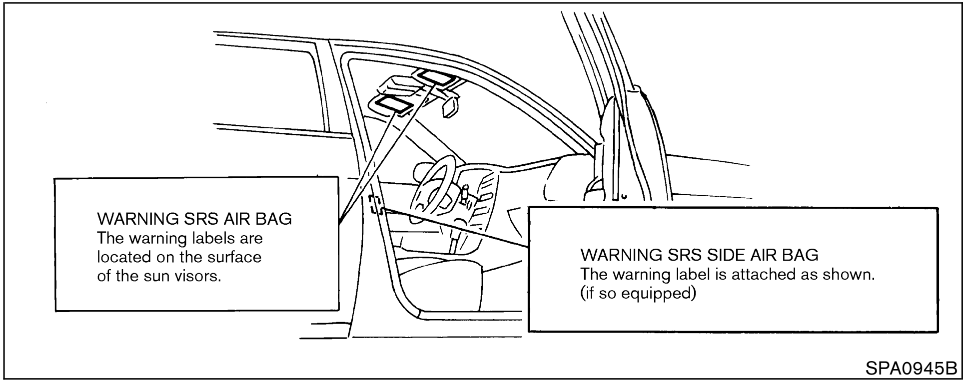

SPA0945B

SUPPLEMENTAL AIR BAG WARNING LABELS

Warning labels about the supplemental air bag system are placed in the vehicle as shown in the illustration.

SPA1097

SUPPLEMENTAL AIR BAG WARNING LIGHT

The supplemental air bag warning light, displaying in the instrument panel, monitors the circuits of the supplemental front air bag, supplemental side air bag system, and pre-tensioner seat belt. The circuits monitored by the air bag warning light are the diagnosis sensor unit, satellite sensors, front air bag modules, side air bag modules, and pre-tensioner seat belt and all related wiring.

After turning the ignition key to the ON position, the supplemental air bag warning light illuminates. The supplemental air bag warning light

will turn off after about 7 seconds if the system is operational.

If any of the following conditions occur, the supplemental front air bag, supplemental side air bag system, and pre-tensioner seat belt need servicing:

- The supplemental air bag warning light remains on after approximately 7 seconds.
- The supplemental air bag warning light flashes intermittently.
- The supplemental air bag warning light does not come on at all.

Under these conditions, the supplemental front air bags, supplemental side air bags, and/or pre-tensioner seat belt may not operate properly. They must be checked and repaired. Take your vehicle to the nearest NISSAN dealer.

WARNING

If the supplemental air bag warning light is on, it could mean that the supplemental front air bag, supplemental side air bag systems and/or pre-tensioner seat belt will not operate in an accident. To help avoid injury to yourself or others, have your vehicle checked by a NISSAN dealer as soon as possible.

Repair and replacement procedure

The supplemental front air bags, supplemental side air bags, and pre-tensioner seat belt are designed to activate on a one-time-only basis. As a reminder, unless it is damaged, the supplemental air bag warning light will remain illuminated after inflation has occurred. Repair and replacement of these systems should be done only by a NISSAN dealer.

When maintenance work is required on the vehicle, the supplemental front air bags, side air bags, related parts and pre-tensioner seat belt should be pointed out to the person conducting the maintenance. The ignition key should always be in the LOCK position when working under the hood or inside the vehicle.

WARNING

- **Once the supplemental front air bag or side air bag has inflated, the air bag module will not function again and must be replaced. Additionally, if any of the supplemental front air bags inflate, the activated pretensioner seat belt must also be replaced. The air bag module and pretensioner seat belt system should be replaced by a NISSAN dealer. The air bag modules and pre-tensioner seat belt system cannot be repaired.**
- **The supplemental front air bag and side air bag systems and pretensioner seat belt system should be inspected by a NISSAN dealer if there is any damage to the front end or side portion of the vehicle.**
- **If you need to dispose of these supplemental systems or scrap the vehicle, contact a NISSAN dealer. Correct disposal procedures are set forth in the appropriate NISSAN Service Manual. Incorrect disposal procedures could cause personal injury.**

MEMO

MEMO

2 Instruments and controls

Instrument panel 2-2
Meters and gauges 2-3
  Speedometer and odometer 2-4
  Tachometer 2-4
  Engine coolant temperature gauge 2-5
  Fuel gauge 2-5
Warning/indicator lights and audible reminders 2-7
  Checking bulbs 2-7
  Warning lights 2-7
  Indicator lights 2-10
  Audible reminders 2-12
Security systems 2-12
  Vehicle security system 2-12
  Nissan Vehicle Immobilizer System 2-14
Windshield wiper and washer switch 2-15
Rear window wiper and washer switch 2-16
Rear window and outside mirror defroster switch........ 2-16
Headlight and turn signal switch 2-17
  Headlight switch 2-17
  Daytime running light system 2-18
  Instrument brightness control 2-18
  Turn signal switch 2-18
  Fog light switch (if so equipped) 2-19
Hazard warning flasher switch 2-19
Horn 2-20
Heated seats (if so equipped) 2-20
SNOW mode switch (if so equipped)........ 2-21
Vehicle dynamic control (VDC) off switch
(if so equipped) 2-21
Clock 2-22
  Adjusting the time 2-22
Power outlet 2-23
Storage 2-24
  Driver's box 2-24
  Multi box........ 2-25
  Cup holders 2-26
  Glove box 2-28
  Upper glove box 2-28
  Console box 2-29
Luggage hooks 2-29
  Cargo net 2-30
  Tonneau cover (if so equipped) 2-31
Roof rack 2-31
Windows 2-32
  Power windows 2-32
Sunroof (if so equipped) 2-34
Interior lights 2-35
  Room light 2-35
  Map light 2-36
  Luggage room light 2-37

INSTRUMENT PANEL

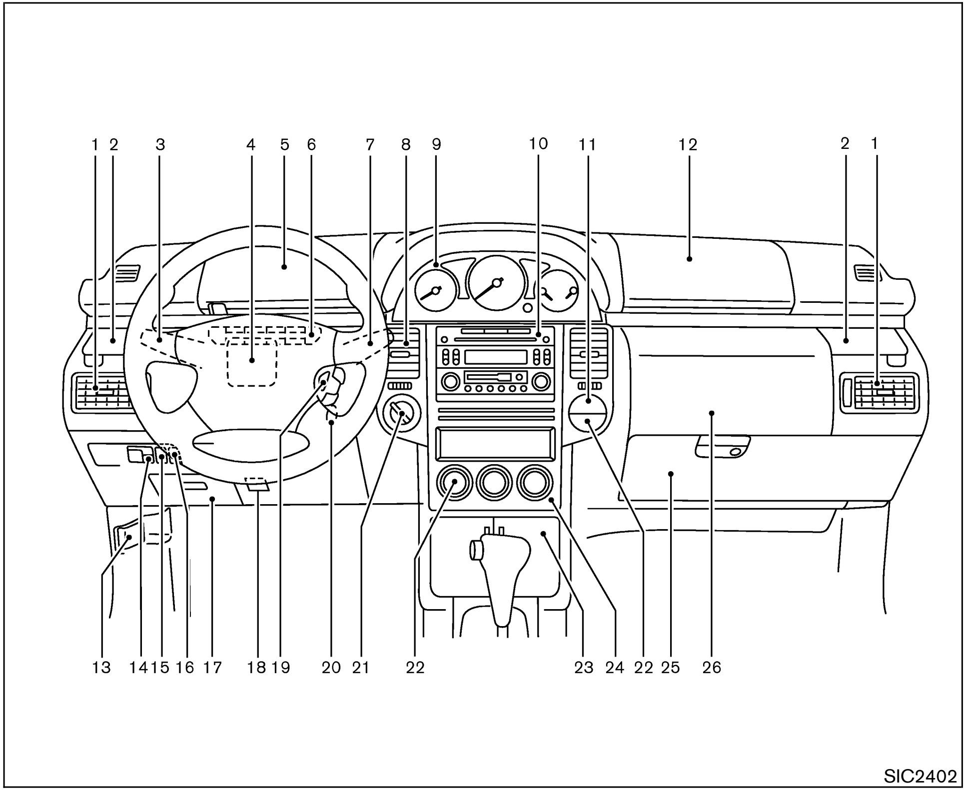

1. Side ventilator
2. Cup holder
3. Headlight/turn signal switch
4. Driver air bag
5. Driver's box
6. Driver's side ventilator
7. Windshield/rear window wiper and washer switch
8. Center ventilator
9. Meters and gauges
10. Audio system
11. Hazard warning flasher switch
12. Passenger air bag
13. Hood release switch
14. Outside mirror remote control
15. Instrument brightness control
16. VDC (Vehicle dynamic control) off switch (*)
17. Fuse box cover
18. Tilting steering wheel lock lever
19. Cruise control switch
20. Ignition switch
21. 4WD mode switch (*)/SNOW mode switch (*)
22. Rear window/outside mirror defroster switch

23. Multi box
24. Heater/air conditioner control
25. Glove box
26. Upper glove box

* If so equipped

METERS AND GAUGES

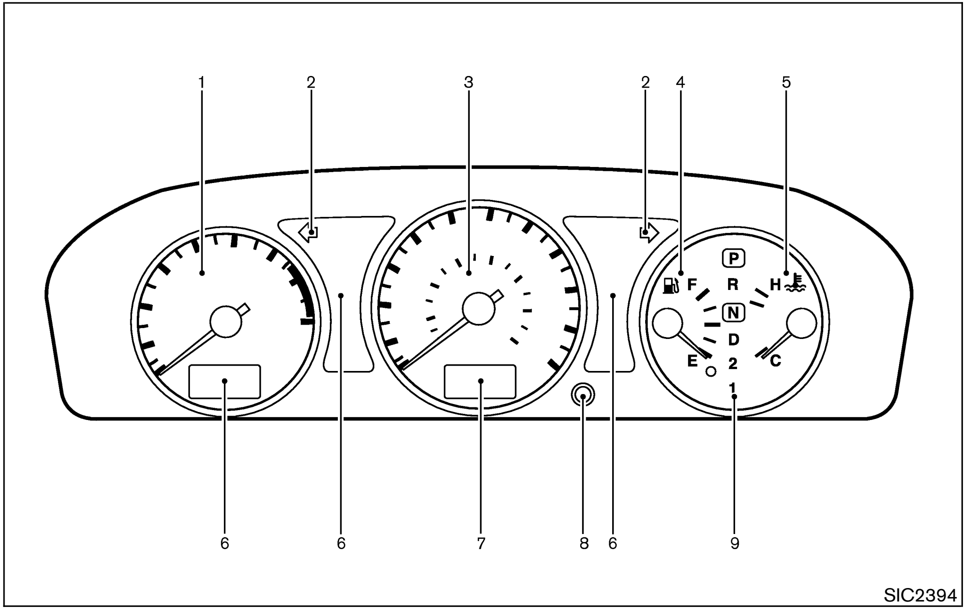

1. Tachometer
2. Turn signal indicator/Hazard indicator
3. Speedometer
4. Fuel gauge
5. Engine coolant temperature gauge
6. Warning/Indicator lights
7. Odometer (Total/Twin trip)
8. Reset knob for trip odometer
9. A/T shift position indicator (if so equipped)

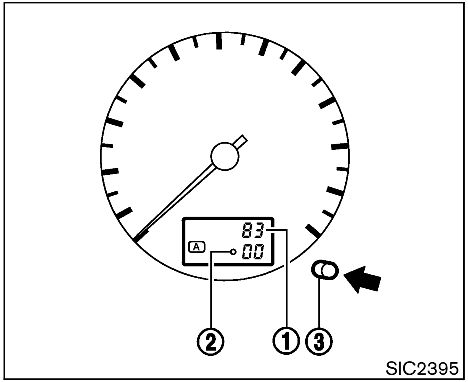

SPEEDOMETER AND ODOMETER

Speedometer

The speedometer indicates vehicle speed.

Odometer/Twin trip odometer

The odometer ①/twin trip odometer ② are displayed when the ignition key is in the ON position.

The odometer records the total distance the vehicle has been driven.

The twin trip odometer records the distance of individual trips.

Changing the display :

Push the reset knob ③ to change the trip odometer display as follows:

TRIP A → TRIP B → CLOCK 🕓 → TEMPERATURE (Outside air — °C) → TRIP A

Resetting the trip odometer :

Push the reset knob for more than 1 second to reset the trip odometer to zero.

Outside air temperature display

- When the outside air temperature is 3°C or lower, the display blinks to give a warning.
- If the outside air temperature becomes 3°C or lower when the display is in one of the other modes, the display switches to the outside air temperature display mode and blinks. If the outside air temperature becomes above 3°C, it returns to the display mode previously set.
- Even while the display is blinking, the display mode can be switched to the one previously set by pushing the reset knob.

Clock display

Refer to "Clock" later in this section for further details on the clock adjustment.

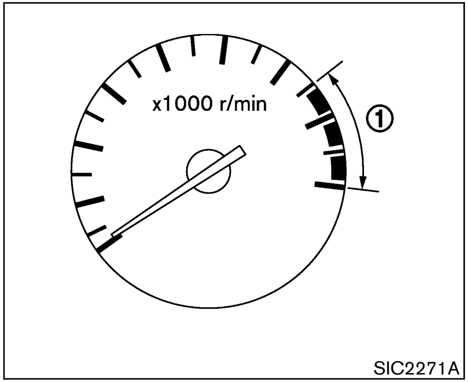

TACHOMETER

The tachometer indicates engine speed in revolutions per minute (rpm).

Do not rev engine into red zone ①.

CAUTION

When engine speed approaches the red zone, shift to a higher gear. Operating the engine in the red zone may cause serious engine damage.

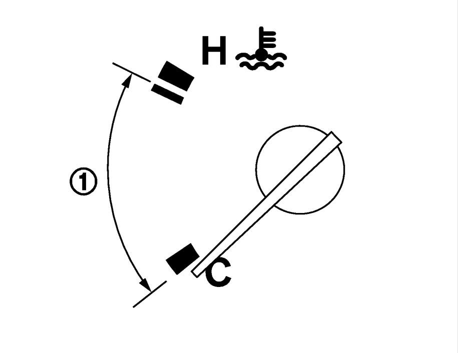

SIC2354B

ENGINE COOLANT TEMPERATURE GAUGE

The gauge indicates the engine coolant temperature.

The engine coolant temperature will vary with the outside air temperature and driving conditions.

CAUTION

If the gauge indicates engine coolant temperature over the normal range ①, stop the vehicle as soon as safely possible. If the engine is overheated, continued operation of the vehicle may seriously damage the engine. See "If your vehicle overheats" in the "6. In case of emergency" section for immediate action required.

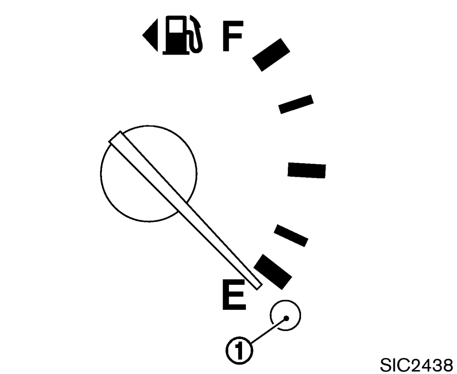

SIC2438

FUEL GAUGE

The gauge indicates the approximate fuel level in the tank.

The gauge may move slightly during braking, turning, acceleration, or going up or down hill.

The gauge needle is designed to move to the E (Empty) position when the ignition key is turned to the OFF position.

Refill the fuel tank before the gauge registers Empty.

The low fuel warning light ① comes on when the fuel tank is getting low. Refuel as soon as it is convenient, preferably before the gauge reaches E. There will be a small reserve of fuel in the tank when the fuel gauge needle reaches E.

The ◀⛽ indicates that the fuel filler lid is located on the driver's side of the vehicle.

CAUTION

- **If the vehicle runs out of fuel, the SERVICE ENGINE SOON malfunction indicator lamp (MIL) may come on. Refuel as soon as possible. After a few driving trips, the SERVICE ENGINE SOON lamp should turn off. If the lamp remains on after a few driving trips, have the vehicle inspected by a NISSAN dealer.**
- **For additional information, see the "Malfunction indicator lamp (MIL)" later in this section.**

WARNING/INDICATOR LIGHTS AND AUDIBLE REMINDERS

(ABS)	Anti-lock brake warning light		Seat belt warning light		High beam indicator light (Blue)
(!)	Brake warning light		Supplemental air bag warning light	SERVICE ENGINE SOON	Malfunction indicator lamp (MIL)
	Charge warning light	CRUISE	Cruise main switch indicator light	O/D OFF	Overdrive off indicator light (A/T models)
	Door open warning light	SET	Cruise set indicator light	SLIP	Slip indicator light (if so equipped)
	Engine oil pressure warning light	4WD	4WD mode indicator light (AUTO) (4WD models)		Turn signal/hazard indicator lights
4WD	4WD warning light (4WD models)	4WD LOCK	4WD mode indicator light (LOCK) (4WD models)	VDC OFF	Vehicle dynamic control (VDC) off indicator light (if so equipped)
	Low washer fluid warning light		Front fog light indicator light (if so equipped)		

CHECKING BULBS

With all doors closed, apply the parking brake, fasten the seat belts and turn the ignition switch to ON without starting the engine. The following lights will come on:

, (!) , , SERVICE ENGINE SOON , 4WD

The following lights come on briefly and then go off:

, (ABS) , 4WD , 4WD LOCK , SLIP , VDC OFF , O/D OFF

If any light fails to come on, it may indicate a burned-out bulb or an open circuit in the electrical system. Have the system repaired promptly.

WARNING LIGHTS

(ABS) Anti-lock brake warning light

After turning the ignition key to the ON position, the light will illuminate and then turn off. This indicates the anti-lock brake system (ABS) is operational.

If the light comes on while the engine is running, it may indicate that the anti-lock brake system is not functioning properly. Have the system checked by your NISSAN dealer.

If an abnormality occurs in the system, the anti-lock function will cease but the ordinary brakes will continue to operate normally. See "Anti-lock brake system (ABS)" in the "5. Starting and driving" section for further details.

If the light comes on while you are driving, contact your NISSAN dealer for repair.

Brake warning light

This light functions for both the parking brake and the foot brake systems.

Parking brake indicator :

When the ignition key is in the ON position, the light comes on when the parking brake is applied.

Low brake fluid warning light :

The light warns of a low brake fluid level. If the light comes on while the engine is running with the parking brake not applied, stop the vehicle and perform the following:

1. Check the brake fluid level. Add brake fluid as necessary. See “Brake and clutch fluid” in the “8. Maintenance and do-it-yourself” section.

WARNING

- **Your brake system may not be working properly if the warning light is on. Driving could be dangerous. If you judge it to be safe, drive carefully to the nearest service station for repairs. Otherwise, have your vehicle towed because driving it could be dangerous.**
- **Pressing the brake pedal with the engine stopped and/or low brake fluid level may increase your stopping distance and braking will require greater pedal effort as well as greater pedal travel.**
- **If the brake fluid level is below the MIN mark on the brake fluid reservoir, do not drive until the brake system has been checked at a NISSAN dealer.**

2. If the brake fluid level is correct, have the warning system checked by a NISSAN dealer. Avoid high speed driving and abrupt braking.

Charge warning light

If the light comes on while the engine is running, it may indicate that the charging system is not functioning properly. Turn the engine off and check the alternator belt. If the belt is loose, broken, missing or if the light remains on, see your NISSAN dealer immediately.

CAUTION

Do not continue driving if the belt is loose, broken or missing.

Door open warning light

This light comes on when any of the doors are not closed securely while the ignition key is ON.

Engine oil pressure warning light

This light warns of low engine oil pressure. If the light blinks or comes on during normal driving, pull off the road in a safe area, stop the engine **immediately** and call a NISSAN dealer or other authorized repair shop.

The engine oil pressure warning light is not designed to indicate a low oil level. Use the dipstick to check the oil level. See “Engine oil” in the “8. Maintenance and do-it-yourself” section.

CAUTION

Running the engine with the oil pressure warning light on could cause seri-

ous damage to the engine almost immediately. Turn off the engine as soon as it is safe to do so.

4WD 4WD warning light (4WD models)

The 4WD warning light comes on when the key switch is turned to ON. It turns off soon after the engine is started.

If the 4WD system malfunctions or the revolution, or radius of the front and the rear wheel differs, the warning light will either remain illuminated or blink. See "Using four wheel drive (4WD)" in the "5. Starting and driving" section.

CAUTION

- **If the warning light comes on while driving, 4WD mode will change to 2WD mode. Reduce the vehicle speed and have your vehicle checked by a NISSAN dealer as soon as possible.**
- **Do not drive on dry hard surface roads in the LOCK mode.**
- **If the 4WD warning light blinks when you are driving:**
  - **blinks rapidly (about twice a second):**
    Pull off the road in a safe area, and idle the engine. The driving mode will change to 2WD to prevent the 4WD system from malfunctioning. If the warning light turns off, you can drive again.
  - **blinks slowly (about once every 2 seconds):**
    Pull off the road in a safe area, and idle the engine. Check that all tire sizes are the same, tire pressure is correct and tires are not worn.

If the warning light is still on after the above operation, have your vehicle checked by a NISSAN dealer as soon as possible.

Low washer fluid warning light

This light comes on when the washer tank fluid is at a low level. Add washer fluid as necessary. See "Window washer fluid" in the "8. Maintenance and do-it-yourself" section.

Seat belt warning light and chime

The light and chime remind you to fasten seat belts. The light illuminates whenever the ignition key is turned to ON, and will remain illuminated until the driver's seat belt is fastened. At the same time, the chime will sound for about 6 seconds unless the driver's seat belt is securely fastened.

See "Seat belts" in the "1. Safety — Seats, seat belt and supplemental restraint system" section for precautions on seat belt usage.

Supplemental air bag warning light

After turning the ignition key to the ON position, the supplemental air bag warning light will illuminate. The supplemental air bag warning light will turn off after about 7 seconds if the system is operational.

If any of the following conditions occur, the supplemental front air bag, supplemental side air bag and curtain side-impact air bag systems, and pre-tensioner seat belt needs servicing and your vehicle must be taken to your nearest NISSAN dealer.

- The supplemental air bag warning light remains on after approximately 7 seconds.
- The supplemental air bag warning light flashes intermittently.
- The supplemental air bag warning light does not come on at all.

Unless checked and repaired, the Supplemental Restraint System and/or the pre-tensioner seat belt may not function properly. For additional information, see "Supplemental restraint system" in the "1. Safety — Seats, seat belt and supplemental restraint system" section.

WARNING

If the supplemental air bag warning light is on, it could mean that the supplemental front air bag, supplemental side air bag and/or pre-tensioner seat belt will not operate in an accident. To help avoid injury to yourself or others, have your vehicle checked by a NISSAN dealer as soon as possible.

INDICATOR LIGHTS

CRUISE Cruise main switch indicator light

The light comes on when the cruise control main switch is pushed. The light goes out when the main switch is pushed again. When the cruise main switch indicator light comes on, the cruise control system is operational.

SET Cruise set indicator light

The light comes on while the vehicle speed is controlled by the cruise control system. If the light blinks while the engine is running, it may indicate the cruise control system is not functioning properly. Have the system checked by your NISSAN dealer.

4WD mode indicator light (AUTO) (4WD models)

This light comes on when the ignition switch is turned to ON, and turns off within 1 second.

While the engine is running, this light will illuminate when selecting AUTO mode. See "Using four wheel drive (4WD)" in the "5. Starting and driving" section.

4WD LOCK 4WD mode indicator light (LOCK) (4WD models)

This light comes on when the ignition switch is turned to ON, and turns off within 1 second.

When selecting LOCK mode while the engine is running, this light will illuminate simultaneously with the 4WD mode indicator light (AUTO) illuminating. See "Using four wheel drive (4WD)" in the "5. Starting and driving" section.

Front fog light indicator light (if so equipped)

The light comes on when the front fog light switch is turned on.

High beam indicator light (Blue)

This light comes on when the headlight high beam is on and goes out when the low beam is selected.

SERVICE ENGINE SOON Malfunction indicator lamp (MIL)

If the malfunction indicator lamp comes on steady or blinks while the engine is running, it may indicate a potential emission control malfunction.

The malfunction indicator lamp may also come on steady if the fuel filler cap is loose or missing, or if the vehicle runs out of fuel. Check to make sure the fuel filler cap is installed and closed tightly, and that the vehicle has at least 14 liters (3 US gallons, 2.5 Imp gallons) of fuel in the fuel tank.

After a few driving trips, the SERVICE ENGINE SOON lamp should turn off if no other potential emission control

system malfunction exists.

If this indicator lamp comes on steady for 20 seconds and then blinks for 10 seconds when the engine is not running, it indicates that the vehicle is not ready for an emission control system inspection/maintenance test. See “Readiness for inspection/maintenance (I/M) test” in the “9. Technical and consumer information” section of this manual.

Operation

The malfunction indicator lamp will come on in one of two ways:

- Malfunction indicator lamp on steady — An emission control system malfunction has been detected. Turn the ignition key to OFF and check the fuel filler cap. If the fuel filler cap is loose or missing, tighten or install the cap and continue to drive the vehicle. The SERVICE ENGINE SOON lamp should turn off after a few driving trips. If the SERVICE ENGINE SOON lamp does not turn off after a few driving trips, have the vehicle inspected by a NISSAN dealer. You do not need to have your vehicle towed to the dealer.
- Malfunction indicator lamp blinking — An engine misfire has been detected which may damage the emission control system. To reduce or avoid emission control system damage:
  - a) Do not drive at speeds above 72 km/h (45 MPH).
  - b) Avoid hard acceleration or deceleration.
  - c) Avoid steep uphill grades.
  - d) If possible, reduce the amount of cargo being hauled or towed.

  The malfunction indicator lamp may stop blinking and come on steady.

  Have the vehicle inspected by a NISSAN dealer. You do not need to have your vehicle towed to the dealer.

CAUTION

Continued vehicle operation without having the emission control system checked and repaired as necessary could lead to poor driveability, reduced fuel economy, and possible damage to the emission control system.

O/D OFF Overdrive off indicator light (A/T models)

This light comes on when the overdrive function is OFF.

The automatic transmission overdrive function is controlled by the overdrive switch.

If the vehicle is driven under extreme conditions, such as excessive wheel spinning and subsequent hard braking, the Fail-safe system may be activated. This will occur even if all electrical circuits are functioning properly. In this case, turn the ignition key OFF and wait for 3 seconds. Then turn the key back to the ON position. The vehicle should return to its normal operating condition. If it does not return to its normal operating condition have your NISSAN dealer check the transmission and repair if necessary.

SLIP Slip indicator light (if so equipped)

This indicator will blink when the VDC system or the traction control system is operating, thus alerting the driver to the fact that the road surface is slippery and the vehicle is nearing its traction limits.

You may feel or hear the system working, but this is normal.

The light will blink on for a few seconds after the VDC system stops limiting wheel spin.

The slip indicator light also comes on when you turn the ignition key to ON. The light will turn off

after about 1 second if the system is operational. If the light does not come on or go off, have the traction control system checked by your NISSAN dealer.

⇦⇨ Turn signal/hazard indicator lights

The light flashes when the turn signal switch lever or hazard switch is turned on.

VDC OFF Vehicle dynamic control (VDC) off indicator light (if so equipped)

After turning the ignition key to the ON position, the light will illuminate and then turn off. This indicates the vehicle dynamic control (VDC) system is operational.

The light comes on when the vehicle dynamic control (VDC) off switch is pushed to OFF. This indicates the vehicle dynamic control system and traction control system are not operating. When the vehicle dynamic control off indicator light and slip indicator light come on with the vehicle dynamic control system turned on, this light alerts the driver to the fact that the vehicle dynamic control system's fail-safe mode is operating, that is the system may not be functioning properly. Have the system checked by your NISSAN dealer. If an abnormality occurs in the system, the vehicle dynamic control system function will be canceled but the vehicle is still driveable. For additional information, see "Vehicle dynamic control (VDC) system" in the "5. Starting and driving" section of this manual.

AUDIBLE REMINDERS

Key reminder chime

The chime will sound if the driver's side door is opened while the key is left in the ignition switch (ignition switch is turned to OFF or ACC). Remove the key and take it with you when leaving the vehicle.

Light reminder chime

The chime will sound when the driver's door is opened with the headlight switch on unless the ignition key is in the ON position.

Make sure to turn the light switch off when you leave the vehicle.

Brake pad wear warning

The disc brake pads have audible wear warnings. When a brake pad requires replacement, it will make a high pitched scraping sound when the vehicle is in motion whether or not the brake pedal is depressed. Have the brakes checked as soon as possible if the warning sound is heard.

SECURITY SYSTEMS

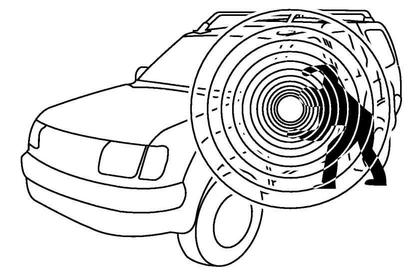

SIC2133

Your vehicle has two types of security systems, as follows:

- Vehicle Security System
- Nissan Vehicle Immobilizer System

The security condition will be shown by the security indicator light.

VEHICLE SECURITY SYSTEM

The vehicle security system provides visual and audible alarm signals if someone opens the doors when the system is armed. It is not, however, a motion detection type system that

activates when a vehicle is moved or when a vibration occurs.

The system helps deter vehicle theft but cannot prevent it, nor can it prevent the theft of interior or exterior vehicle components in all situations. Always secure your vehicle even if parking for a brief period. Never leave your keys in the vehicle, and always lock the vehicle when unattended. Be aware of your surroundings, and park in secure, well-lit areas whenever possible.

Many devices offering additional protection, such as component locks, identification markers, and tracking systems, are available at auto supply stores and specialty shops. Your NISSAN dealer may also offer such equipment. Check with your insurance company to see if you may be eligible for discounts for various theft protection features.

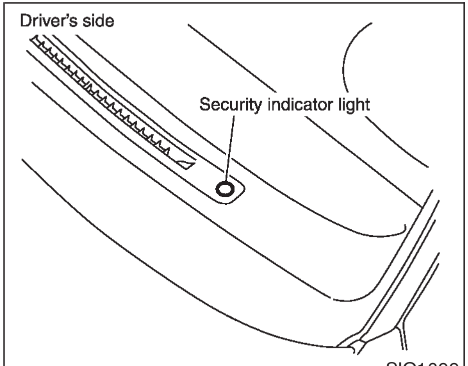

SIC1699

How to activate the vehicle security system

1. Close all windows.

The system can be activated even if the windows are open.

2. Remove the key from the ignition switch.
3. Close and lock all doors, hood and back door.

   Lock all doors by pressing the LOCK button on the keyfob or using the key. When using the keyfob, the hazard indicators flash to indicate all doors are locked.
4. Confirm that the SECURITY indicator light comes on. The SECURITY indicator light glows for about 30 seconds and then blinks. The system is now activated. If, during this 30 second time period, the door is unlocked by the key or the keyfob, or the ignition key is turned to ACC or ON, the system will not activate.

Even when the driver and/or passengers are in the vehicle, the system will activate with all doors, hood and back door locked and ignition key off. Turn the ignition key to ACC to turn the system off.

Vehicle security system operation

The security system will give the following alarm:

- The headlights blink and the horn sounds intermittently.
- The alarm automatically turns off after approximately 25 seconds, and this will be repeated three times. However, the alarm reactivates if the vehicle is tampered with again. The alarm can be shut off by unlocking a door with the key, or by pressing the UNLOCK button on the keyfob.

The alarm is activated by:

- Opening the door (including the back door) without using the key or keyfob.

- Opening the back door.

How to stop alarm

The alarm will stop only by unlocking a door with the key, or by pressing the UNLOCK button on keyfob. The alarm will not stop if the ignition switch is turned to ACC or ON.

If the system does not operate as described above, have it checked by your NISSAN dealer.

NISSAN VEHICLE IMMOBILIZER SYSTEM

The Nissan Vehicle Immobilizer System will not allow the engine to start without the use of the registered Nissan Vehicle Immobilizer System key.

If the engine fails to start using the registered Nissan Vehicle Immobilizer System key, it may be due to interference caused by another Nissan Vehicle Immobilizer System key, an automated toll road device or automated payment device on the key ring. Restart the engine using the following procedures:

1. Leave the ignition switch in the ON position for approximately 5 seconds.
2. Turn the ignition switch to the OFF or LOCK position and wait approximately 10 seconds.
3. Repeat step 1 and 2 again.
4. Restart the engine while holding the device (which may have caused the interference) separate from the registered Nissan Vehicle Immobilizer System key.

   If this procedure allows the engine to start, NISSAN recommends placing the registered Nissan Vehicle Immobilizer System key on a separate key ring to avoid interference from other devices.

Statement related to section 15 of FCC rules for Nissan Vehicle Immobilizer System (CONT ASSY-IMMOBILIZER)

This device complies with RSS-210 of Industry Canada and Part 15 of the FCC Rules. Operation is subject to the following two conditions;

(1) This device may not cause harmful interference, and (2) this device must accept any interference received, including interference that may cause undesired operation of the device.

CHANGES OR MODIFICATIONS NOT EXPRESSLY APPROVED BY THE MANUFACTURE FOR COMPLIANCE COULD VOID THE USER'S AUTHORITY TO OPERATE THE EQUIPMENT.

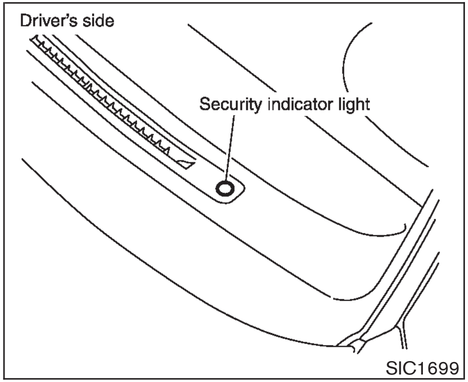

Security indicator light

This light blinks whenever the registered Nissan Vehicle Immobilizer System key is removed or turned to OFF, ACC or LOCK position. This function indicates the security systems equipped on the vehicle are operational.

If Nissan Vehicle Immobilizer System is malfunctioning, this light will remain on while the registered Nissan Vehicle Immobilizer System Key is in the ON position.

If the light still remains on and/or the engine will not start, see your NISSAN dealer for Nissan Vehicle Immobilizer Sys-

tem service as soon as possible. Please bring all Nissan Vehicle Immobilizer System keys that you have when visiting your NISSAN dealer for service.

WINDSHIELD WIPER AND WASHER SWITCH

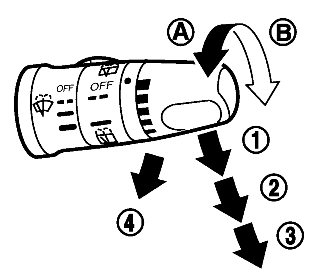

SIC2415

The windshield wiper and washer operates when the ignition key is in the ON position.

Push the lever down to operate the wiper at the following speeds:

① Intermittent — intermittent operation can be adjusted by turning the knob toward Ⓐ (Slower) or Ⓑ (Faster).

② Low — continuous low speed operation

③ High — continuous high speed operation

Pull the lever toward you ④ to operate the washer. Then the wiper will also operate several times.

WARNING

In freezing temperatures the washer solution may freeze on the windshield and obscure your vision which may lead to an accident. Warm the windshield with the defroster before you wash the windshield.

CAUTION

The following could damage the washer system:

- **Do not operate the washer continuously for more than 30 seconds.**
- **Do not operate the washer if the reservoir tank is empty.**

REAR WINDOW WIPER AND WASHER SWITCH

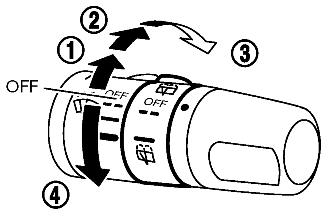

SIC2416

The rear window wiper and washer operate when the ignition switch is in the ON position.

Turn the switch clockwise from the OFF position to operate the wiper.

① Intermittent — intermittent operation (not adjustable)

② Low — continuous low speed operation

Turn the switch clockwise to the position ③ to operate the washer.

Turn the switch counterclockwise to the position ④ to operate the washer. Then the wiper will also operate several times.

CAUTION

- **If the rear window wiper operation is interrupted by snow etc., the wiper may stop moving to protect its motor. If this occurs, turn the wiper switch to OFF and remove the snow etc. on and around the wiper arms. After about 1 minute, turn the switch ON again to operate the wiper.**
- **Do not operate the washer continuously for more than 30 seconds.**
- **Do not operate the washer if reservoir tank is empty.**

WARNING

In freezing temperatures the washer solution may freeze on the rear window glass and obscure your vision. Warm the rear window glass with the defroster before you wash.

REAR WINDOW AND OUTSIDE MIRROR DEFROSTER SWITCH

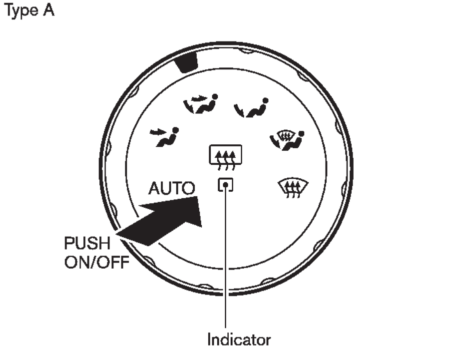

SIC1960A

To defog/defrost the rear window glass and outside mirrors, start the engine and push the switch on. The indicator light will come on. Push the switch again to turn the defroster off.

It will automatically turn off in approximately 15 minutes.

CAUTION

When cleaning the inner side of the rear window, be careful not to scratch or damage the rear window defroster.

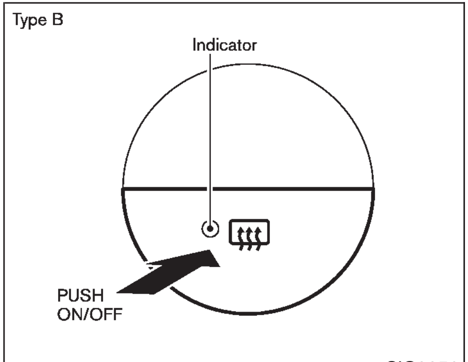

SIC2350

HEADLIGHT AND TURN SIGNAL SWITCH

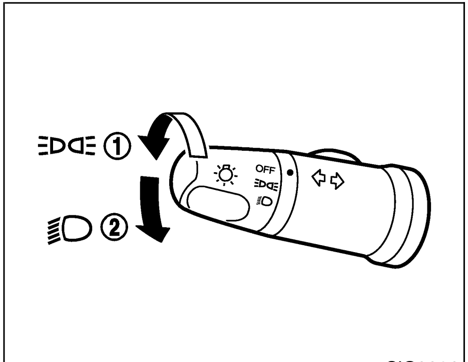

SIC2396

HEADLIGHT SWITCH

Lighting

① Turn the switch to the position:

The front park, side marker, tail, license plate and instrument lights will come on.

② Turn the switch to the position:

Headlights will come on and all the other lights remain on.

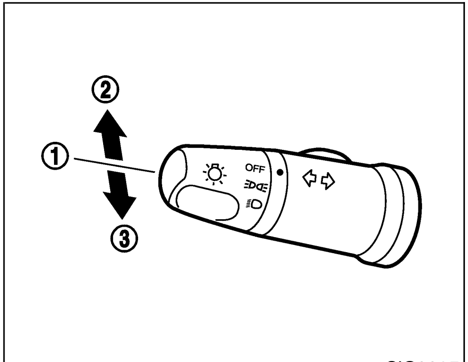

SIC2397

Headlight beam select

① To select the low beam, put the lever in the neutral position as shown.

② To select the high beam, push the lever forward while the switch is in the position. Pull it back to select the low beam.

③ Pulling the lever toward you will flash the headlight high beam.

DAYTIME RUNNING LIGHT SYSTEM

The daytime running lights automatically illuminate when the engine is started and once the parking brake is released. The daytime running lights operate with the headlight switch in the OFF position or in the position.

The daytime running lights will be turned off when the headlight switch is turned to the position.

The daytime running lights will remain on until the ignition switch is turned to the ACC or OFF position.

WARNING

When the daytime running light system is active, tail lights on your vehicle are not on. It is necessary at dusk to turn on your headlights. Failure to do so could cause an accident injuring yourself and others.

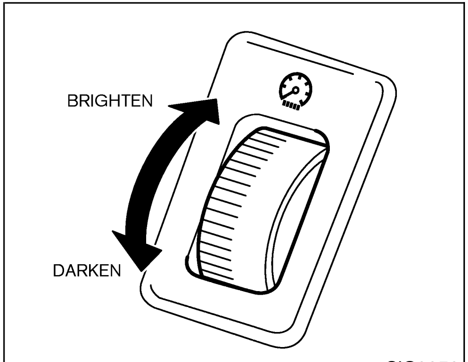

SIC2373

INSTRUMENT BRIGHTNESS CONTROL

The instrument brightness control operates when the light switch is in the or position and the ignition switch is in the ON position.

Keep turning the control to adjust the brightness of instrument panel lights.

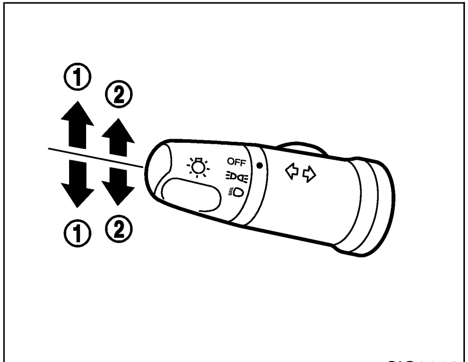

SIC2398

TURN SIGNAL SWITCH

① Turn signal

Move the lever up or down to signal the turning direction. When the turn is completed, the turn signals cancel automatically.

② Lane change signal

To indicate a lane change, move the lever up or down to the point where lights begin flashing.

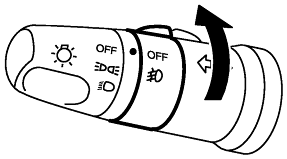

SIC2399

FOG LIGHT SWITCH (if so equipped)

To turn the fog lights on, turn the headlight switch to the or position, then turn the switch to the position. To turn them off, turn the switch to the OFF position.

HAZARD WARNING FLASHER SWITCH

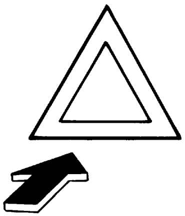

SIC1447A

Push the switch on to warn other drivers when you must stop or park under emergency conditions. All turn signal lights will flash.

WARNING

- **If stopping for an emergency, be sure to move the vehicle well off the road.**
- **Do not use the hazard warning flashers while moving on the highway unless unusual circumstances force you to drive so slowly that your vehicle might become a hazard to other traffic.**
- **Turn signals do not work when the hazard warning flasher lights are on.**

The flasher will operate with the ignition switch in any position.

HORN

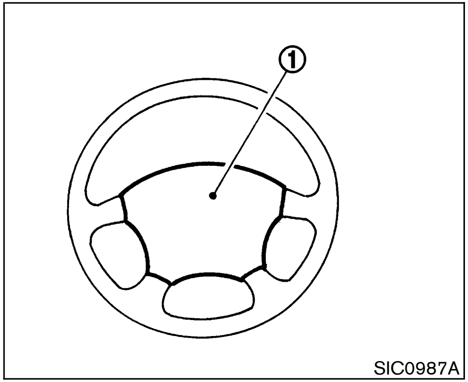

To sound the horn, push the center pad area ① of the steering wheel.

⚠ WARNING

Do not disassemble the horn. Doing so could affect proper operation of the supplemental front air bag system. Tampering with the supplemental front air bag system may result in serious personal injury.

HEATED SEATS (if so equipped)

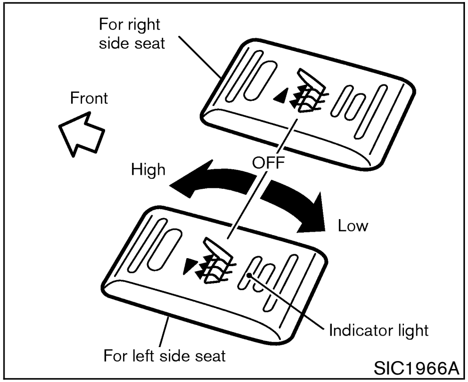

The front seats are warmed by built-in heaters. The switches located on the center console can be operated independently of each other.

1. Start the engine.
2. Select heat range.
   - For high heat, press the ⬭ (High) side of the switch.
   - For low heat, press the ⬭ (Low) side of the switch.
   - For no heat, the switch has a center OFF position between low and high.

   The indicator light in the switch will illuminate when low or high is selected.

   The heater is controlled by a thermostat, automatically turning the heater on and off. The indicator light will remain on as long as the switch is on.
3. When the vehicle's interior is warmed, or before you leave the vehicle, be sure to turn the switch to the off position (center).

⚠ CAUTION

- **The battery could be discharged if the seat heater is operated while the engine is not running.**
- **Do not use the seat heater for extended periods or when no one is using the seat.**
- **Do not put anything on the seat which insulates heat, such as a blanket, cushion, seat cover, etc. Otherwise, the seat may become overheated.**
- **Do not place anything hard or heavy on the seat or pierce it with a pin or similar object. This may result in**

damage to the heater.

- **Any liquid spilled on the heated seat should be removed immediately with a dry cloth.**
- **When cleaning the seat, never use gasoline, thinner, or any similar materials.**
- **If any abnormalities are found or the heated seat does not operate, turn the switch off and have the system checked by your NISSAN dealer.**

SNOW MODE SWITCH (if so equipped)

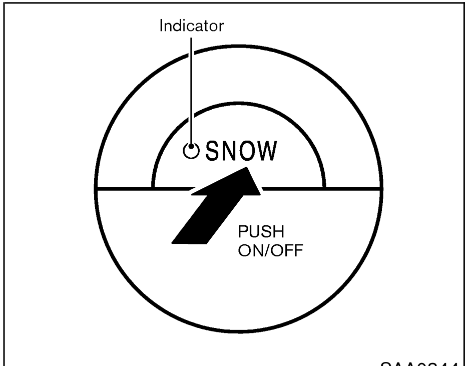

SAA0844

For driving or starting the vehicle on snowy roads or slippery areas, push the SNOW mode switch and indicator light on the switch will illuminate. When the SNOW mode is activated, engine output is controlled to avoid wheel spin.

VEHICLE DYNAMIC CONTROL (VDC) OFF SWITCH (if so equipped)

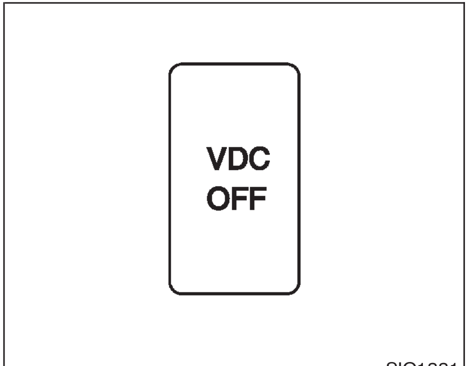

SIC1881

The vehicle should be driven with the Vehicle Dynamic Control (VDC) System ON for most driving conditions.

When the vehicle is stuck in mud or snow, the VDC system reduces the engine output to reduce wheel spin. The engine speed will be reduced even if the accelerator is depressed to the floor. If maximum engine power is needed to free a stuck vehicle, turn the VDC system off.

To cancel the Vehicle Dynamic Control (VDC) System, push the VDC OFF switch to turn off the system. The indicator light will come on.

Push the VDC OFF switch again or restart the

engine to turn ON the system. See “Vehicle dynamic control (VDC) system” in the “5. Starting and driving” section.

CLOCK

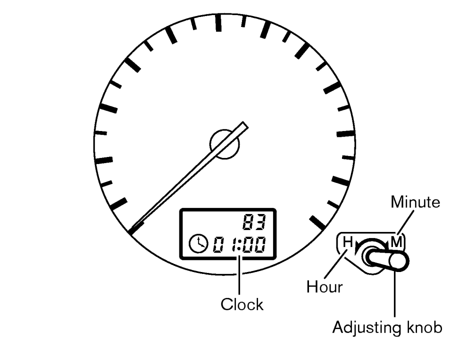

SIC2362

The digital clock displays time when the ignition key is in the ON position.

If the power supply is disconnected, the clock will not indicate the correct time. Readjust the time.

ADJUSTING THE TIME

Speedometer display model

You can adjust the clock when it is displayed.

To display the clock, push the adjusting knob. The following is the order of the display:

TRIP A → TRIP B → CLOCK (clock symbol) → TEMPERATURE (Outside air — °C) → TRIP A

Turn the adjusting knob left to adjust the hour.

Turn the adjusting knob right to adjust the minutes.

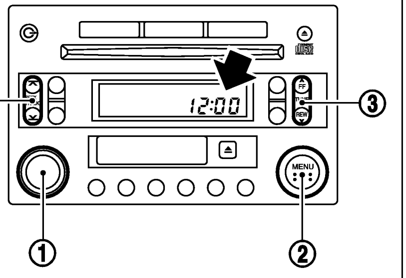

SIC2341

Audio display model

1. Turn the audio unit on by pushing the “PWR” button ①.
2. Push the “MENU” button ② until the display indicates the clock adjustment mode.

If the “CLOCK OFF” is indicated on the display, push the “TUNE” button ③ to change the mode to “CLOCK ON”. Then push the “MENU” button ②.

The time indicator will flash.

3. Push the “SEEK TRACK” button ④ to adjust the hour.

Push the “TUNE” button ③ to adjust the minute.

Pushing the ⌄ , FF buttons will advance and ⌄ , REW buttons will turn back the time.

4. Push the “MENU” button ② to finish the adjustment.

POWER OUTLET

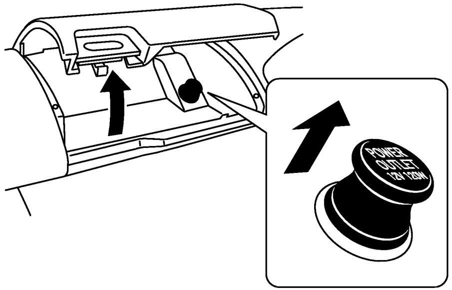

SIC2407

The power outlet is for powering electrical accessories such as cellular telephones.

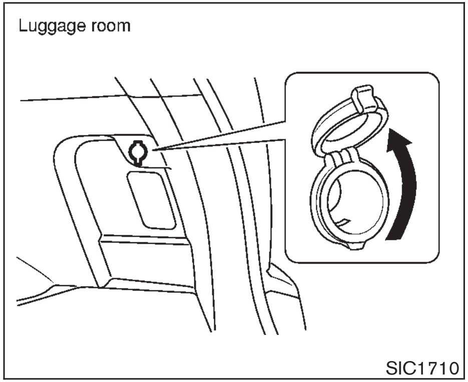

SIC1710

CAUTION

- **Use caution as the socket and plug may be hot during or immediately after use.**
- **This power outlet is not designed for use with a cigarette lighter unit.**
- **Do not use with accessories that exceed a 12 volt, 120W (10A) power draw. Do not use double adapters or more than one electrical accessory.**
- **Use only one power outlet at a time.**
- **Use this power outlet with the engine running. (If the engine is stopped, this could result in a discharged battery.)**
- **Avoid using when the air conditioner, headlights or rear window defroster is on.**
- **Before inserting or disconnecting a plug, be sure to turn off the power switch of electrical accessory being used or the ACC power of the vehicle.**
- **Push the plug in as far as it will go. If good contact is not made, the plug may overheat or the internal temperature fuse may blow.**
- **When not in use, be sure to replace the cover. Do not allow water to contact the socket.**

STORAGE

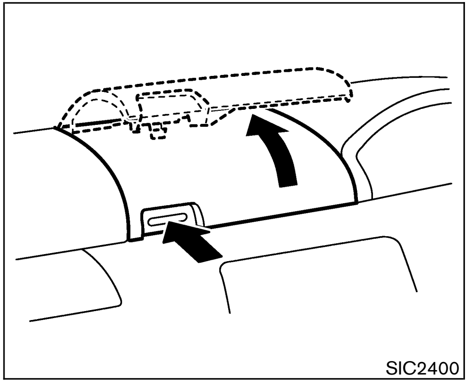
SIC2400

DRIVER'S BOX

To open the driver's box, push the button and pull up.

WARNING

Keep the lid of the box closed while driving to help prevent injury in an accident or a sudden stop.

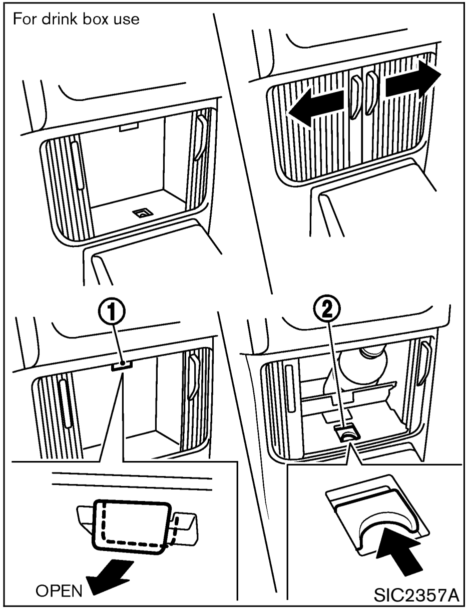

MULTI BOX

Drink box

You can store unopened beverages in the box.

To keep the beverage warm or cool, open the sliding panels, allow the air to come in by pulling the air flow control knob ①, and put the drink in the box. Then close the sliding panels.

To put in a 500 mℓ can or plastic beverage bottle, push the holder switch ② and place it at an angle.

WARNING

Do not put in or take out objects from the drink box/pocket while driving so that full attention may be given to vehicle operation.

CAUTION

- **Do not drive with the sliding panels open. Objects inside may come out, and this may result in unexpected injuries.**
- **Do not leave carbonated beverages inside because the temperatures in a closed vehicle could easily become high if the engine is stopped on hot days.**
- **Avoid abrupt starting or braking when the multi box is being used.**
- **Do not spill the drink. It may cause damage to the vehicle.**
- **The temperature of the inside of the box is the same as that of the airflow. It cannot change the temperature of the drink extremely.**

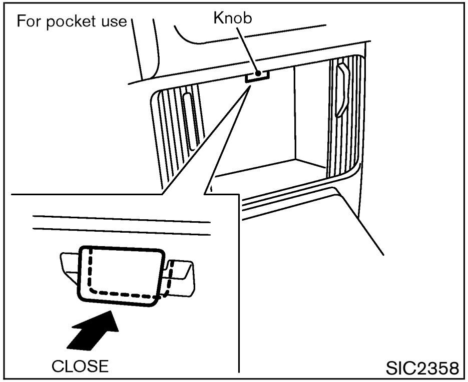

Pocket

You can use the box as a pocket.

Open the sliding panels, and shut the air flow by pushing the air flow control knob. Put an object in the box, then close the sliding panels.

- **Do not put any objects that can melt in the pocket. An object may damage the vehicle if it melts.**
- **Do not leave any plastic objects. They may be deformed.**
- **Do not put in jewelry such as rings, earrings and so on, because they may be deformed by heat.**

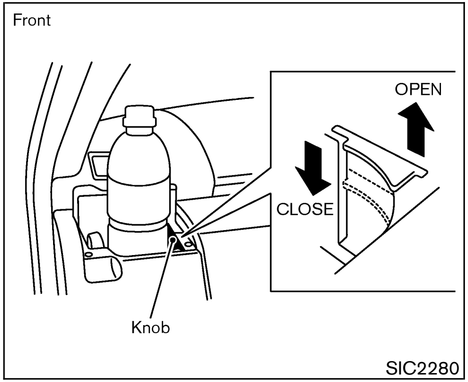

CUP HOLDERS

WARNING

The cup holder should not be used while driving so full attention may be given to vehicle operation.

CAUTION

- **Avoid abrupt starting and braking**

when the cup holder is being used to prevent spilling the drink. If the liquid is hot, it can scald you or your passenger.

- **Use only soft cups in the cup holder. Hard objects can injure you in an accident.**

Front:

While the air conditioner is cooling the air, drinks can be kept cold.

- Open the cover and put a drink in it.
- Pull up the knob to keep the drink cold.
- Push down the knob when the cooling function is not used.
- When a high temperature is set or the air conditioner is warming the air, the cooling function will not work even if the knob is pulled up.
- The temperature of the inside of the holder is the same as that of the air blowing from the air conditioner. The drink cannot be cooler than the temperature set by air conditioner.
- The cap of a plastic beverage bottle can be put beside the holder.

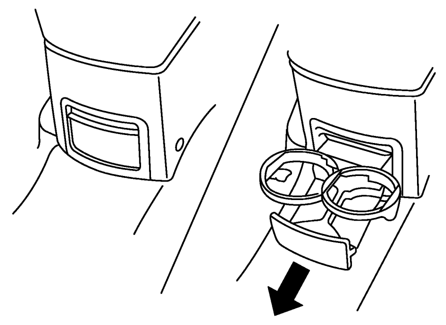

SIC2281

Rear cup holders:

Rear cup holders are located at the rear of the center console.

- Pull out the cover to use them.
- Push them in when they are not being used.

CAUTION

- **Store them when they are not used. Be careful not to stumble or not to hook anything while they are being used. An unexpected accident may occur.**
- **The rear cup holders should be stored when the rear seat is folded down.**

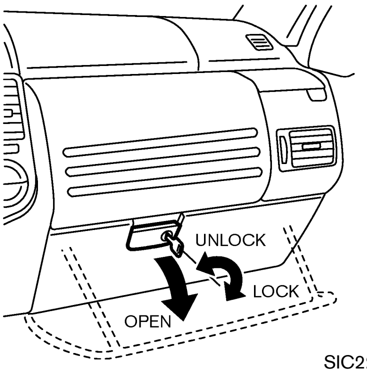

SIC2282

GLOVE BOX

When locking or unlocking the glove box, use the master key.

- Pull the knob to open the glove box.
- Push the knob forward to close the glove box.

WARNING

Keep glove box lid closed while driving to help prevent injury in an accident or a sudden stop.

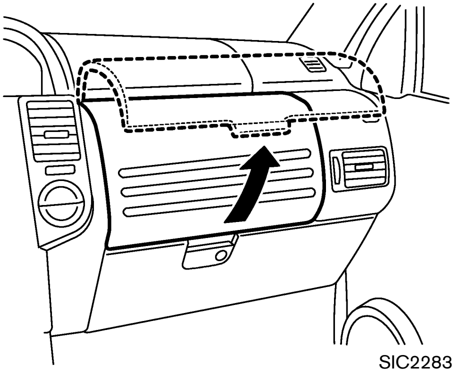
SIC2283

UPPER GLOVE BOX

- Push up the lock knob to open the upper glove box.
- Push down the lid to close the upper glove box.

WARNING

Keep upper glove box lid closed while driving to prevent injury in an accident or a sudden stop.

CAUTION

Please do not forcibly open the upper glove box lid upward. The lid might be damaged.

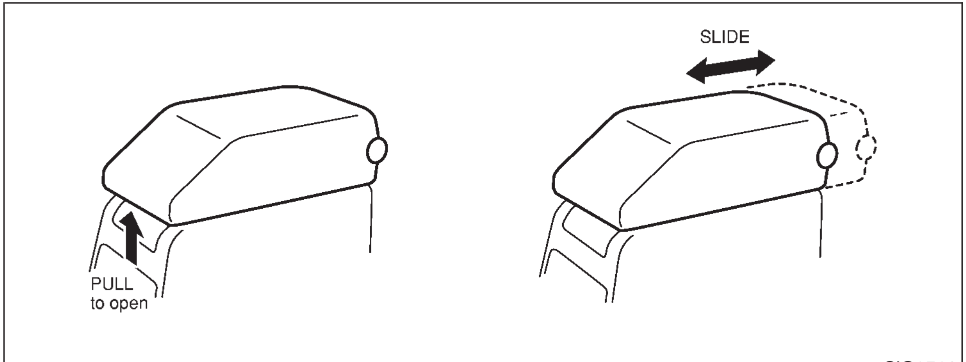

SIC1719

CONSOLE BOX

WARNING

- **The center console box should not be used while driving so full attention may be given to vehicle operation.**
- **Keep the center console box lid closed while driving to prevent injury in an accident or a sudden stop.**

CAUTION

Do not place valuable items in the center console box.

LUGGAGE HOOKS

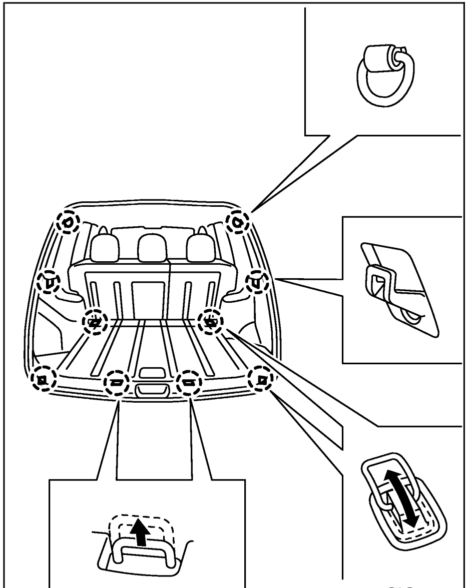
SIC2401

WARNING

- **Always make sure that the luggage is properly secured. Use the suitable**

ropes and hooks.

- **Unsecured luggage can become dangerous in an accident or sudden stop.**

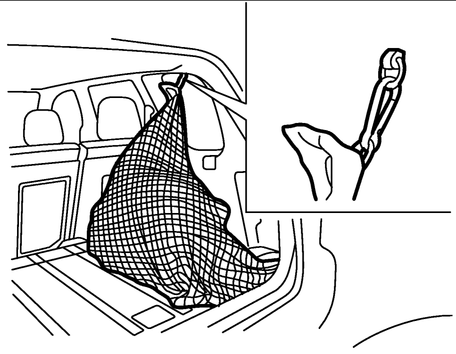

SIC2284

CARGO NET

The cargo net helps keep packages in the cargo area from moving around while your vehicle is driven.

Wrap the baggage with a net and fix the baggage. Use the attached stoppers on a preferred position of the net and clip it on any of the hooks of the luggage room. Depending on the position of luggage hook used, the state of the stretched net can be preferably adjusted.

CAUTION

Do not put any baggage on the stretched net in the luggage room while your vehicle is driven. When brakes are applied, the baggage may jump out to the front or fall from the net, and it may lead to an unexpected accident. When you put your baggage on the net, wrap the baggage with a net and fix the baggage.

WARNING

- **Properly secure all cargo to help prevent it from sliding or shifting.**
- **Be sure to secure hooks into the retainers. The cargo restrained in the net must not exceed 10 kg (22 lb) or the net may not stay secured.**

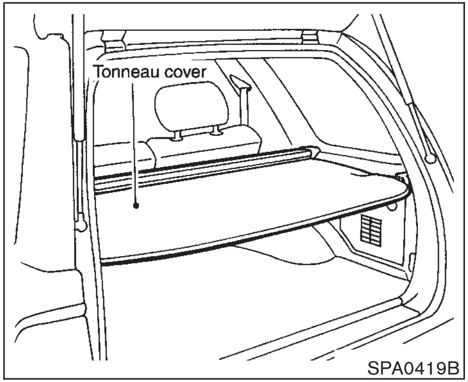

SPA0419B

TONNEAU COVER (if so equipped)

The tonneau cover keeps the luggage compartment contents hidden from the outside.

To open the tonneau cover, pull it out and hang both sides on the hooks. The tonneau cover can also be covered to the rear seat side. To close the tonneau cover, remove it from the hooks and release it.

WARNING

- **Never put anything on the tonneau cover, no matter how small. Any object on it could cause an injury in an accident or sudden stop.**
- **Close the tonneau and sub covers when folding the rear seat.**
- **Do not leave the tonneau cover in the vehicle with it disengaged from the holder.**
- **Properly secure all cargo to help prevent it from sliding or shifting. Do not place cargo higher than the seatbacks. In a sudden stop or collision, unsecured cargo could cause personal injury.**
- **The top tether strap may be damaged by contact with the tonneau cover or items in the cargo area. Remove the tonneau cover from the vehicle or secure it and any cargo. Your child could be seriously injured or killed in a collision if the top tether strap is damaged.**

ROOF RACK

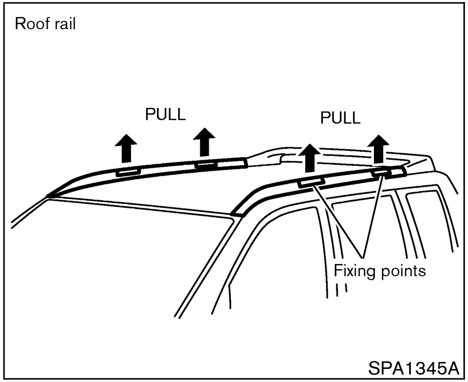

SPA1345A

Luggage can be carried on the roof by securing crossbars to the roof rails. Follow all crossbar manufacturers instructions for installing and use of the crossbars. The roof rails are designed to carry loads (luggage plus crossbars) below 100 kg (221 lb). Overloading may cause damage to the vehicle.

CAUTION

- **Do not put or hang anything on or around side pipes or plastic covers.**

- **Do not remove plastic covers except at the crossbar fixing points.**

WINDOWS

POWER WINDOWS

WARNING

- **Make sure that all passengers have their hands, etc. inside the vehicle while it is in motion and before closing the windows. Use the window lock switch to prevent unexpected use of the power windows.**
- **Do not leave children unattended inside the vehicle. They could unknowingly activate switches or controls and become trapped in a window. Unattended children could become involved in serious accidents.**

The power windows operate when the ignition key is in the ON position.

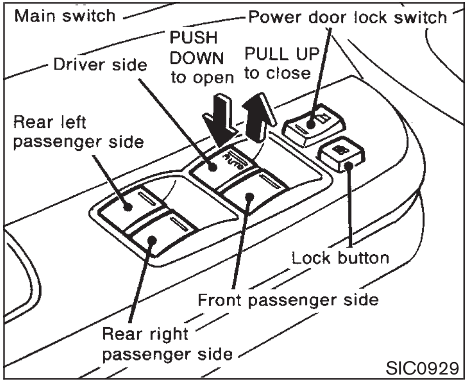

Main power window switch (driver's side)

To open or close the window, push down or pull up the switch and hold it. The main switch (driver side switches) will open or close all the windows.

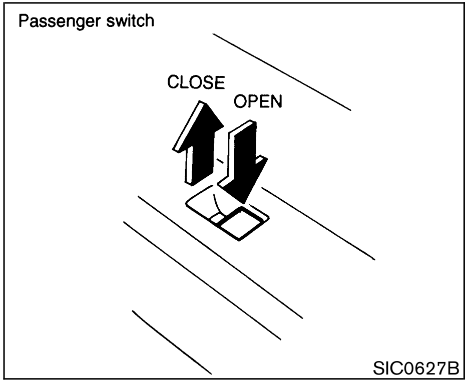

Passenger side power window switch

The passenger side switch will open or close only the corresponding window. To open or close the window, hold the switch down or up.

Locking passenger's windows

When the lock button is pushed in, only the driver side window can be opened or closed. Push it in again to cancel.

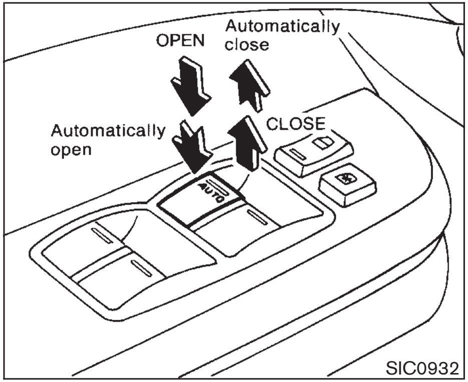

Automatic operation (For driver's window)

To fully open or close the driver's window, completely push down or pull up the switch and release it; it need not be held. The window will automatically open or close all the way. To stop the window, just press or lift the switch on the opposite side.

Auto reverse function

If the control unit detects something caught in the driver's window as it moves up, the window will be immediately lowered.

The auto reverse function can be activated when the driver's window is closed by automatic operation when the ignition key is in the ON position.

Depending on the environment or driving conditions, the auto reverse function may be activated if an impact or load similar to something being caught in the window occurs.

WARNING

There are some small distances immediately before the closed position which cannot be detected. Make sure that all passengers have their hands, etc., inside the vehicle before closing the window.

SUNROOF (if so equipped)

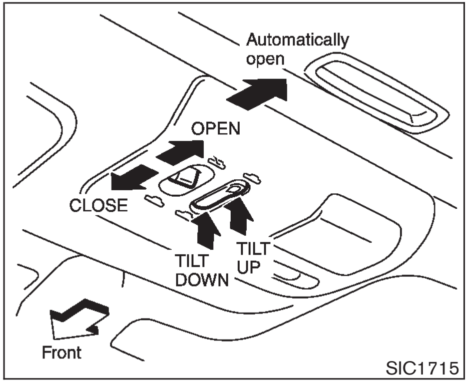

The sunroof will only operate when the ignition key is in the ON position.

Sliding the sunroof

To open the roof, keep pressing the switch to the side.

To close the roof, keep pressing the switch to the side.

Automatic operation

To open the roof automatically, completely press the switch to the side and release it; it need not be held. The roof stops just before the fully opened position. To open the roof completely, keep pressing the switch again until the sunroof stops.

To stop the roof, just press the switch toward the opposite side. To fully close the sunroof, you need to hold the switch.

A light press on the switch will cause the roof to open or close until the switch is released.

Tilting the sunroof

To tilt up, first close the sunroof, then keep pushing the side of the tilt switch. To tilt down the sunroof, keep pushing the side.

Sun shade

Open or close the sun shade by sliding it backward or forward.

The shade will open automatically when the sunroof is opened. However, it must be closed manually.

WARNING

- **In an accident you could be thrown from the vehicle through an open sunroof. Always use seat belts and child restraints.**
- **Do not allow anyone to stand up or extend any portion of their body out of the opening while the vehicle is in motion or while the sunroof is closing.**

CAUTION

- **Remove water drops, snow, ice or sand from the sunroof before opening.**
- **Do not place any heavy object on the sunroof or surrounding area.**

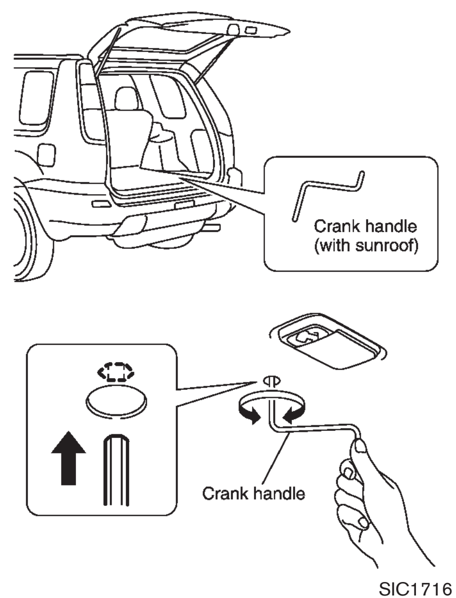

SIC1716

If the sunroof does not close

Turn the ignition key off.

1. Remove the cover.
2. Take out the crank handle supplied in the luggage under box.
3. Insert the longer side of the crank handle into the hole.

- Turn the handle clockwise to close the sunroof.
- If the sunroof is tilted up, turn the handle counterclockwise.

Have your NISSAN dealer check and repair the sunroof.

INTERIOR LIGHTS

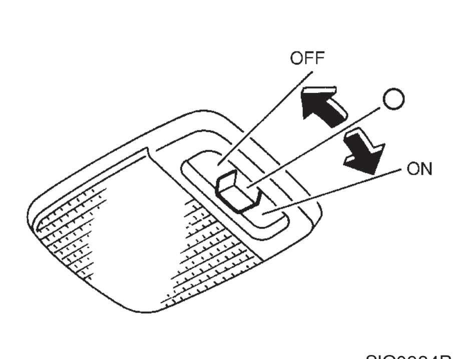

SIC0934B

ROOM LIGHT

The room light has a three-position switch.

When the switch is in the center ◯ or DOOR position, the light will illuminate when a door (including back door) is opened.

Interior light timer

The room light will stay on for about 30 seconds when:

- The driver's door is unlocked by the keyfob or a key while all doors are locked.
- The key is removed from the ignition switch

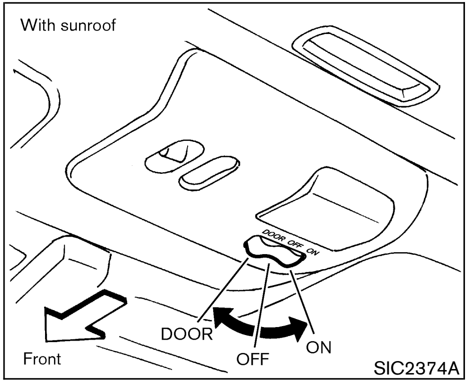

SIC2374A

while all doors are closed.

- The driver's door is unlocked while the key is removed from the ignition switch.
- The driver's door is opened and then closed while other doors are closed.

The room light will turn off while the 30 second timer is activated, when:

- The driver's door is locked either with the keyfob, a key, the door inside lock knob, or the power door lock switch.
- The ignition switch is turned ON.

CAUTION

- **Turn off the interior lights when you leave the vehicle.**
- **Do not use for extended periods of time with the engine stopped. This could result in a discharged battery.**

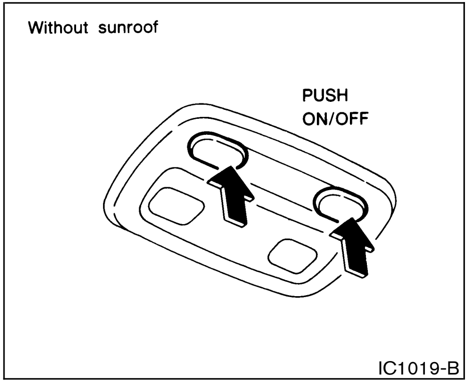

IC1019-B

MAP LIGHT

CAUTION

- **Turn off the interior lights when you leave the vehicle.**
- **Do not use for extended periods of time with the engine stopped. This could result in a discharged battery.**

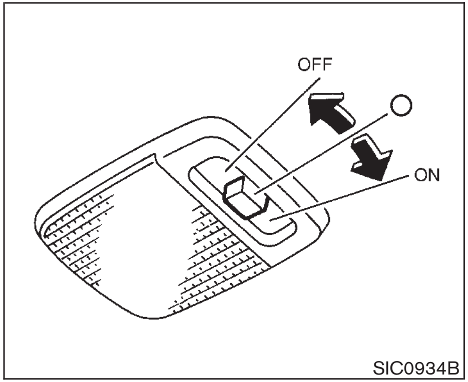

SIC0934B

LUGGAGE ROOM LIGHT

The luggage room light has a three-position switch.

When the switch is in the center ◯ position, the light will illuminate when a door (including the back door) is opened.

Interior light timer

Timer function works the same as ROOM LIGHT, see “ROOM LIGHT” earlier in this section.

CAUTION

- **Turn off the interior lights when you leave the vehicle.**
- **Do not use for extended periods of time with the engine stopped. This could result in a discharged battery.**

MEMO

3 Pre-driving checks and adjustments

Keys 3-2
- Nissan Vehicle Immobilizer System (NVIS) keys 3-2

Door locks 3-3
- Locking with key 3-3
- Locking with inside lock knob 3-3
- Locking with power door lock switch 3-4
- Child safety rear door lock 3-4

Remote keyless entry system 3-4
- Using remote keyless entry system 3-5
- Battery replacement 3-6

Hood 3-8

Back door 3-8

Fuel filler lid 3-10
- Opening fuel filler lid 3-10
- Fuel filler cap 3-10

Steering wheel 3-11
- Tilt operation 3-11

Mirrors 3-12
- Inside rearview mirror 3-12
- Outside rearview mirrors 3-12
- Vanity mirror 3-13

KEYS

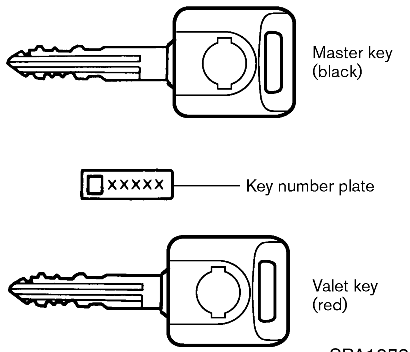

SPA1378M

A key number plate is supplied with your keys. Record the key number and keep the key number plate in a safe place except in the vehicle. If you lose your keys, see an NISSAN dealer for duplicates by using the key number.

A key number is necessary when you have lost all keys and do not have one to duplicate from. If you still have a key, your NISSAN dealer can duplicate it.

NISSAN VEHICLE IMMOBILIZER SYSTEM (NVIS) KEYS

You can only drive your vehicle using the master or valet keys which are registered to the Nissan Vehicle Immobilizer System components in your vehicle. These keys have a transponder chip in the key head.

The master key can be used for all the locks.

The valet key cannot be used for glove box lock.

To protect belongings when you leave a key with someone, give them the valet key only.

Never leave these keys in the vehicle.

Nissan Vehicle Immobilizer System KEY — Master and Valet keys:

If you still have a key, the key number is not necessary when you need extra Nissan Vehicle Immobilizer System keys. Your NISSAN dealer can duplicate it. As many as 5 NVIS keys can be used with one vehicle. You should bring all NVIS keys that you have to your NISSAN dealer for registration. This is because the registration process will erase the memory of all key codes previously registered into the Nissan Vehicle Immobilizer System. After the registration process, these components will only recognize keys coded into the Nissan Vehicle Immobilizer System (NVIS) during registration. Any key that is not given to your dealer at the time of registration will no longer be able to start your vehicle.

Do not allow the immobilizer system key, which contains an electrical transponder, to come into contact with salt water. This could affect system function.

DOOR LOCKS

WARNING

- **Always have the doors locked while driving. Along with the use of seat belts, this provides greater safety in the event of an accident by helping to prevent persons from being thrown from the vehicle. This also helps keep children and others from unintentionally opening the doors, and will help keep out intruders.**
- **Before opening any door, always look for and avoid oncoming traffic.**
- **Do not leave children unattended inside the vehicle. They could unknowingly activate switches or controls. Unattended children could become involved in serious accidents.**

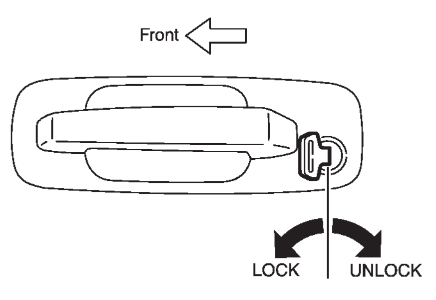

SPA1333

LOCKING WITH KEY

The power door lock system allows you to lock or unlock all doors simultaneously.

- Turning the key toward the front of the vehicle locks all doors.
- Turning the key one time toward the rear of the vehicle unlocks that door. From that position returning the key to neutral (where the key can only be removed and inserted) and turning it toward the rear again within 5 seconds unlocks all doors.

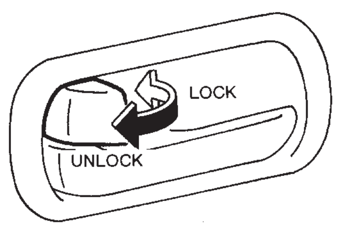

SPA0510

LOCKING WITH INSIDE LOCK KNOB

To individually lock the doors, move the inside lock knob to the LOCK position, then close the door. To unlock, pull the inside lock knob up to the UNLOCK position.

When locking the door without a key, be sure not to leave the key inside the vehicle.

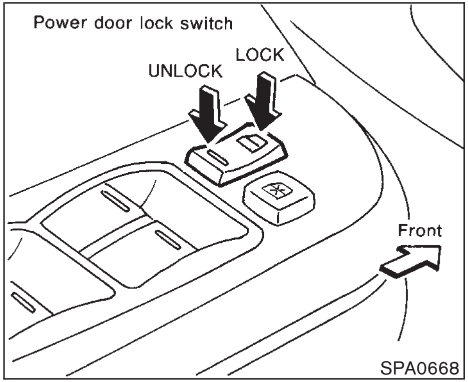

SPA0668

LOCKING WITH POWER DOOR LOCK SWITCH

Operating the power door lock switch will lock or unlock all doors and the back door when the driver or front passenger side door is closed.

Lockout protection

When the power door lock switch (driver or front passenger) is moved to the LOCK position with the key in the ignition and any door open, all doors will lock and unlock automatically. This helps to prevent the keys from being accidentally locked inside the vehicle.

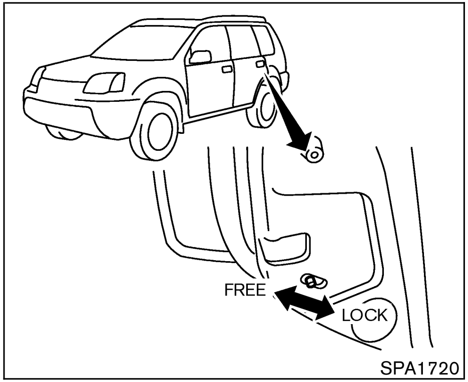

SPA1720

CHILD SAFETY REAR DOOR LOCK

Child safety locking helps prevent doors from being opened accidentally, especially when small children are in the vehicle.

When the lever is in the LOCK position, the rear door can be opened only from the outside.

REMOTE KEYLESS ENTRY SYSTEM

It is possible to lock/unlock all doors (including the back door) and activate the panic alarm by using the keyfob from outside the vehicle.

Before locking the doors, make sure the key is not left in the vehicle.

The keyfob can operate at a distance of approximately 10 m (33 ft) from the vehicle. (The effective distance depends upon the conditions around the vehicle.)

As many as five keyfobs can be used with one vehicle. For information concerning the purchase and use of additional keyfobs, contact your NISSAN dealer.

The keyfob will not function when:

- the battery is discharged,
- the distance between the vehicle and the keyfob is over 10 m (33 ft).

The panic alarm will not activate when the key is in the ignition switch.

CAUTION

The following conditions or occurrences will damage the keyfob.

- **Do not allow the keyfob to become wet.**

- **Do not drop the keyfob.**
- **Do not strike the keyfob sharply against another object.**
- **Do not place the keyfob for an extended period in an area where temperatures exceed 60°C (140°F).**

If a keyfob is lost or stolen, NISSAN recommends erasing the ID code of that keyfob. This will prevent the keyfob from unauthorized use to unlock the vehicle. For information regarding the erasing procedure, please contact a NISSAN dealer.

USING REMOTE KEYLESS ENTRY SYSTEM

Locking doors

1. Remove the ignition key.*1
2. Close all the doors.*2
3. Push the LOCK button on the keyfob.
4. All the doors will lock.

All of the doors will lock when the LOCK button on the keyfob is pushed even though a door remains open and/or the ignition key is in the ON position.

5. The hazard indicator flashes twice.

- When the LOCK button is pushed with all doors locked, the hazard indicator flashes twice as a reminder that the doors are already locked.

*1: Doors lock with the keyfob while a key is in the ignition switch. However, the panic alarm will not activate when the key is in the ignition switch.

*2: Doors lock with the keyfob while any door is open. However, hazard indicator and horn mode will not function.

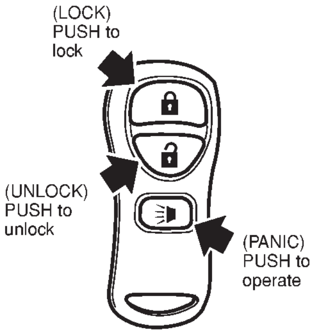

SPA1397

Unlocking doors

1. Push the UNLOCK button on the keyfob once.

- The driver's door unlocks
- The hazard indicator flashes once if all doors are completely closed with the ignition key in any position except the ON position.
- The interior light turns on and the light timer activates for 30 seconds when the switch is in the DOOR or center ◯ position with the ignition key in any position except the ON position.

2. Push the UNLOCK button on the keyfob again within 5 seconds.

- All doors unlock
- The hazard indicator flashes once if all doors are completely closed.

If the following operation is not carried out within 5 minutes after pressing the UNLOCK button, all doors will be locked automatically.

- **any door is opened.**
- **the ignition key is turned to the ON position**

The interior light can be turned off without waiting for 30 seconds by turning the ignition switch to the ON position or by locking the doors with the keyfob.

Using the panic alarm

If you are near your vehicle and feel threatened, you may activate the alarm to call attention as follows:

1. Push the PANIC button on the keyfob for **longer than 0.5 seconds.**
2. The theft warning alarm and headlights will stay on for 30 seconds.
3. The panic alarm stops when:

- It has run for 30 seconds, or
- The LOCK or the UNLOCK button is pressed, or
- The PANIC button is pushed on the keyfob for more than 0.5 seconds.

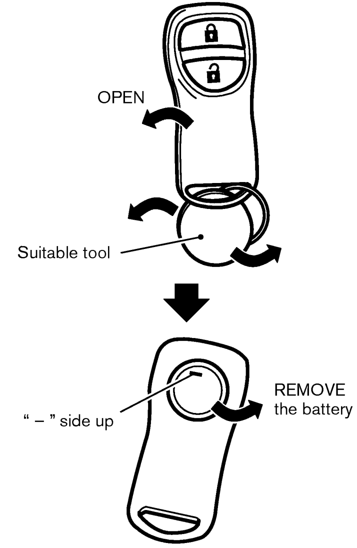

SPA1374A

BATTERY REPLACEMENT

Replace the battery as follows:

1. Open the lid using a suitable tool.
2. Replace the battery with a new one.

Recommended battery: CR2025 or equivalent

Make sure that the ⊕ side faces the bottom case.

3. Close the lid securely.
4. Push the keyfob button two or three times to check its operation.

See your NISSAN dealer if you need any assistance for replacement.

If the battery is removed for any reason other than replacement, perform the step 4 above.

- **Be careful not to touch a circuit board and a battery terminal.**
- **An improperly disposed battery can harm the environment. Always confirm local regulations for battery disposal.**
- **The keyfob is water-resistant; however, if it does get wet, immediately wipe completely dry.**
- **When changing batteries, do not let dust or oil get on the keyfob.**

FCC Notice:

Changes or modifications not expressly approved by the manufacturer compliance could void the user's authority to operate the equipment. This device complies with RSS-210 of Industry Canada and Part 15 of the FCC Rules. Operation is subject to the following two conditions: (1) This device may not cause harmful interference, and (2) this device must accept any interference received, including interference that may cause undesired operation of the device.

HOOD

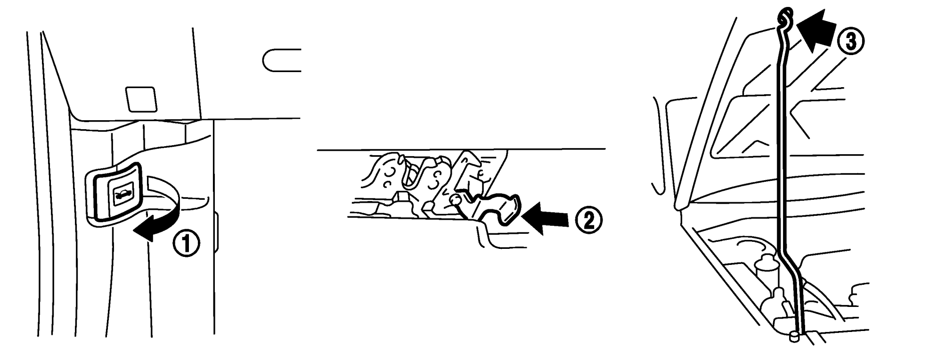

SPA1817

1. Pull the hood lock release handle ① located below the instrument panel; the hood will then spring up slightly.
2. Move the lever ② at the front of the hood with your fingertips and raise the hood.
3. Insert the assist bar ③ into the slot in the front edge of the hood.
4. When closing the hood, reset the assist bar to its original position, then slowly close the hood and make sure it locks into place.

⚠ WARNING

- **Make sure the hood is completely closed and latched before driving. Failure to do so could cause the hood to fly open and result in an accident.**
- **If you see steam or smoke coming from the engine compartment, to avoid injury do not open the hood.**

BACK DOOR

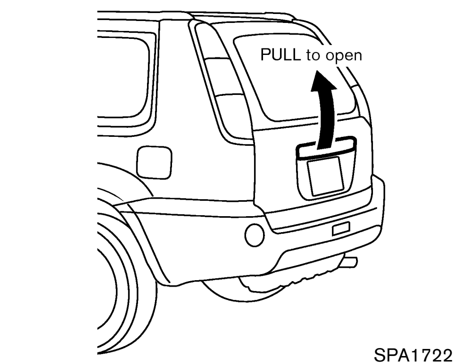

SPA1722

- The power door lock system allows you to lock or unlock all doors including the back door simultaneously.
- Pull the opener handle to open the back door.

⚠ WARNING

Do not drive with the back door open. This could allow dangerous exhaust gases to be drawn into the vehicle. See “Precautions when starting and driving” in the “5. Starting and driving” section

for exhaust gas.

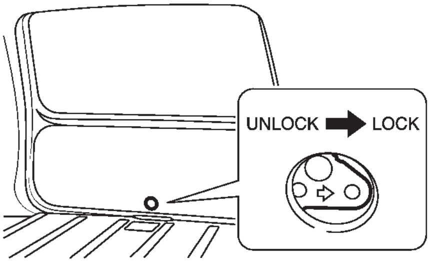

SPA1332

To lock or unlock the back door

If the back door cannot be locked or unlocked with the power door lock switch or keyfob due to a discharged battery, follow the next steps.

1. Remove the cover inside of the back door with a suitable tool.
2. Move the lever as illustrated to lock or unlock.

Contact your NISSAN dealer as soon as possible.

WARNING

- **Always check the back door has been closed securely to prevent it from opening while driving.**
- **Do not drive with the back door open. This could allow dangerous exhaust gases to be drawn into the vehicle.**

FUEL FILLER LID

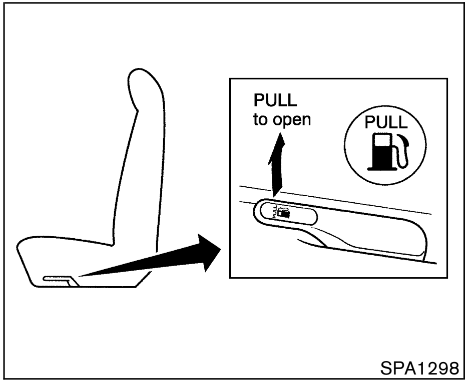

OPENING FUEL FILLER LID

To open the fuel filler lid, pull up the opener lever. To lock, close the fuel filler lid securely.

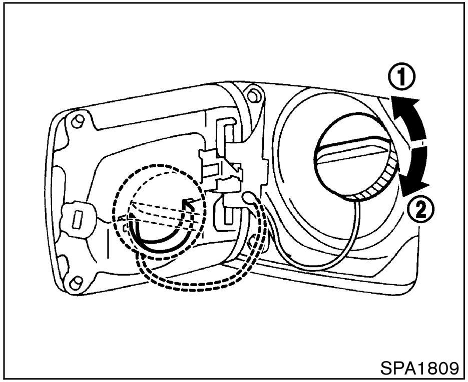

FUEL FILLER CAP

The fuel filler cap is a ratcheting type. Turn the cap counterlockwise ① to remove. Tighten the cap clockwise ② until ratcheting clicks, more than twice, after refueling.

Put the fuel filler cap on the cap holder while refueling.

WARNING

- **Gasoline is extremely flammable and highly explosive under certain conditions. You could be burned or seriously injured if it is misused or mishandled. Always stop the engine and do not smoke or allow open flames or sparks near the vehicle when refueling.**
- **Fuel may be under pressure. Turn the cap a third of a turn, and wait for any hissing sound to stop to prevent fuel from spraying out and possible personal injury. Then remove the cap.**
- **Do not attempt to top off the fuel tank after the fuel pump nozzle shuts off automatically.**
Continued refueling may cause fuel overflow, resulting in fuel spray and possibly a fire.
- **Use only an original equipment type fuel filler cap as a replacement. It has a built-in safety valve needed for proper operation of the fuel system and emission control system. An incorrect cap can result in a serious malfunction and possible injury. It could also cause the SERVICE ENGINE SOON malfunc-**

tion indicator lamp to come on.

- **Do not fill a portable fuel container in the vehicle or trailer. Static electricity can cause an explosion of flammable liquid, vapor or gas in any vehicle or trailer. To reduce the risk of serious injury or death when filling portable fuel containers:**
  - **Always place the container on the ground when filling.**
  - **Do not use electronic devices while filling.**
  - **Keep the pump nozzle in contact with the container while you are filling it.**
  - **Use only approved portable fuel containers for flammable liquid.**
- **Never pour fuel into the throttle body to attempt to start your vehicle.**

CAUTION

- **If fuel is spilled on the car body, flush it away with water to avoid paint damage.**
- **Tighten until the fuel filler cap clicks. Failure to tighten the fuel filler cap properly may cause the SERVICE ENGINE SOON malfunction indicator lamp (MIL) to illuminate. If the SERVICE ENGINE SOON lamp illuminates because the fuel filler cap is loose or missing, tighten or install the cap and continue to drive the vehicle. The SERVICE ENGINE SOON lamp should turn off after a few driving trips. If the SERVICE ENGINE SOON lamp does not turn off after a few driving trips, have the vehicle inspected by an authorized NISSAN dealer.**
- **For additional information, see the “Malfunction indicator lamp (MIL)” in the “2. Instruments and controls” section.**

STEERING WHEEL

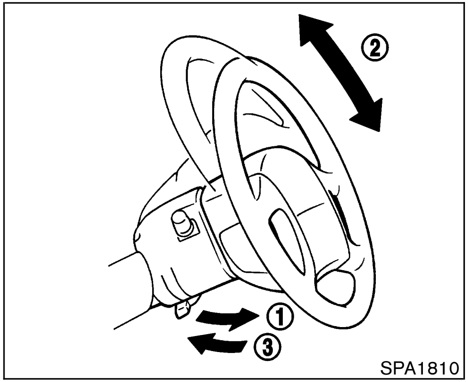

SPA1810

TILT OPERATION

Pull the lock lever ① and adjust the steering wheel up or down ② to the desired position. Push the lock lever back ③ securely to lock the steering wheel in place.

WARNING

- **Do not adjust the steering wheel while driving. You could lose control of your vehicle and cause an accident.**

- **Do not put anything on or near the steering wheel when tilting.**

MIRRORS

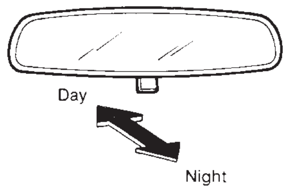

PD1006M

INSIDE REARVIEW MIRROR

The night position will reduce glare from the headlights of vehicles behind you at night.

WARNING

Use the night position only when necessary, because it reduces rear view clarity.

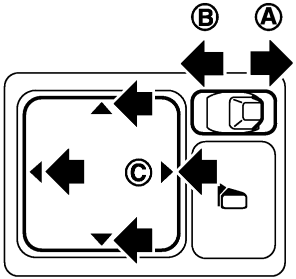

SPA1449A

OUTSIDE REARVIEW MIRRORS

WARNING

Objects viewed in the outside mirror on the passenger side are closer than they appear. Be careful when moving to the right. Using only this mirror could cause an accident. Use inside mirror or glance over your shoulder to properly judge distances to other objects.

The outside mirror will operate only when the

ignition switch is in the ACC or ON position.

Move the switch to right Ⓐ or left Ⓑ to select the right or left outside mirror, then adjust the mirror to the desired position by pushing the button Ⓒ. After adjustment, move the select switch to the center position.

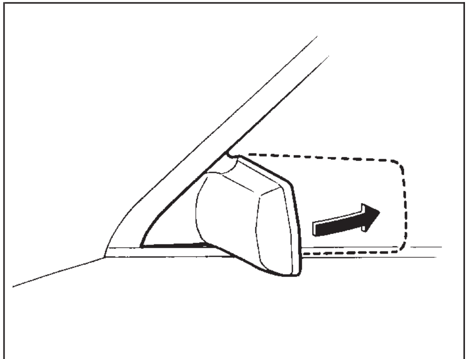

IC0565

Foldable outside mirrors

Fold the outside mirror by pushing it toward the rear of the vehicle.

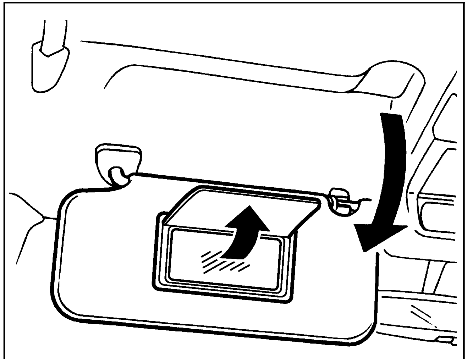

SPA1733

VANITY MIRROR

To use the front vanity mirror, pull down the sun visor and pull up the cover.

MEMO

4 Heater, air conditioner and audio systems

Ventilators 4-2
Heater and air conditioner 4-3
  Manual type 4-3
  Automatic type 4-6
Servicing air conditioner 4-9
Audio system 4-10
  Audio operation precautions 4-10
  Antenna 4-11
  FM-AM radio with cassette player and compact disc (CD) changer 4-14
  FM-AM radio with compact disc (CD) player 4-20
  CD care and cleaning 4-24
Car phone or CB radio 4-24

VENTILATORS

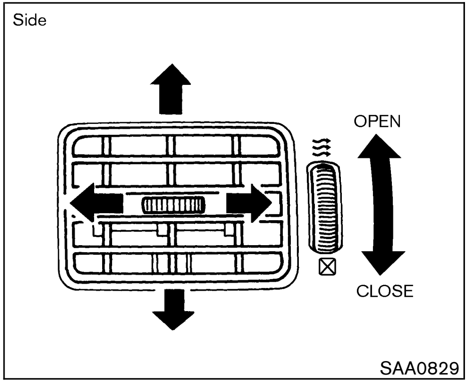

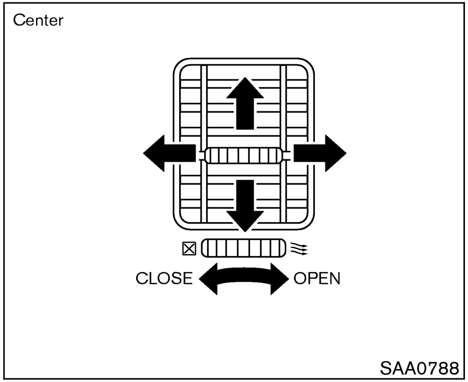

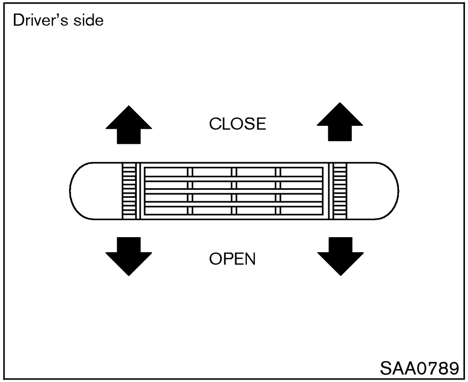

Open or close, and adjust the air flow direction of ventilators.

⊠ : This symbol indicates that the vents are closed when the vent switch is moved downward.

: This symbol indicates that the vents are open when the vent switch is moved upward.

HEATER AND AIR CONDITIONER

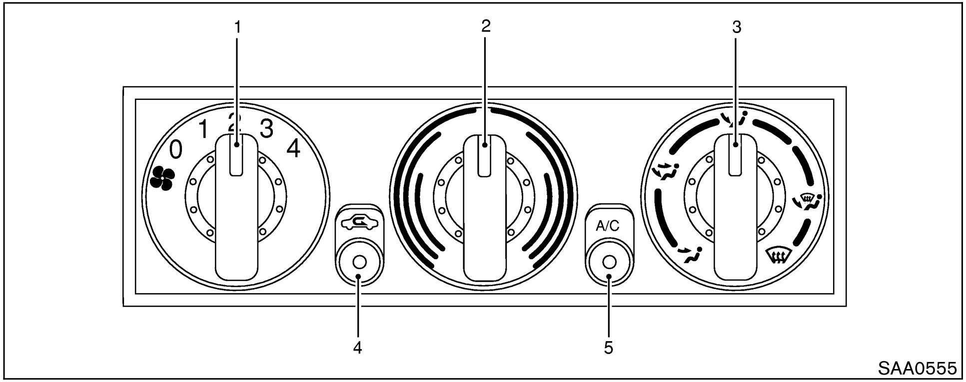

MANUAL TYPE

1. Fan control dial
2. Temperature control dial
3. Air flow control dial
4. Air recirculation button
5. Air conditioner button

WARNING

- **The air conditioner cooling function operates only when the engine is running.**
- **Do not leave children or adults who would normally require the support of others alone in your vehicle. Pets should not be left alone either. On hot, sunny days, temperatures in a closed vehicle could quickly become high enough to cause severe or possibly fatal injuries to people or animals.**
- **Using the recirculation mode for long periods may cause the interior air to become stale and the windows to fog up.**
- **Changing heating or air conditioning controls should not be done while driving so that full attention may be given to vehicle operation.**

Control dials/buttons

Fan speed control :

This dial turns the fan on and off, and controls fan speed.

Temperature control :

This dial allows you to adjust the temperature of the outlet air.

Air flow control :

This dial allows you to select the air flow outlets.

— Air flows from center and side ventilators.

— Air flows from center and side ventilators and foot outlets.

— Air flows mainly from foot outlets.

— Air flows from defroster outlets and foot outlets.

— Air flows from defroster outlets.

Air recirculation button :

Off position:

Outside air is drawn into the passenger compartment.

Use the off position for normal heater, or air conditioner operation.

If dust is not raised in front of the vehicle, this position is effective to prevent dust entry.

On position (Indicator light on):

Interior air is recirculated inside the vehicle.

Push the air recirculation button to the on position when driving on a dust raised road or to avoid traffic fumes.

Air conditioner button :

Start the engine, move the fan control dial to the desired (1 to 4) position and push the air conditioner button to turn on the air conditioner. The indicator light will come on when the air conditioner button is on. To stop the air conditioner, push the switch again to return it to the original position.

The air conditioner cooling function operates only when the engine is running.

Heater operation

Heating :

This mode is used to direct hot air from the floor outlets.

1. Push the air recirculation button to the OFF position for normal heating.
2. Turn the air control dial to the position.
3. Turn on the fan control dial.
4. Turn the temperature control dial to the desired position between the middle and the hot position.

- For quick heating, move the air recirculation button to the ON position. Be sure to return the air recirculation button to the OFF position for normal heating.

Ventilation :

This mode directs outside air from the side and center vents.

1. Push the air recirculation button to the OFF position.
2. Turn the air control dial to the position.
3. Turn on the fan control dial.
4. Turn the temperature control dial to the desired position.

Defrosting or defogging :

This mode is used to defrost/defog the windows.

1. Push the air recirculation button to the OFF position.
2. Turn the air control dial to the position.
3. Turn on the fan control dial.
4. Turn the temperature control dial to the desired position between the middle and the hot position.

- To quickly remove ice from the windows, push the air recirculation button to the ON position, the fan control dial to 4 and the temperature control dial to the full hot position. As soon as possible after the window is clear, push the air recirculation button to the off position.

Bi-level heating :

This mode directs outside air from the side and center vents and hot air from the floor outlets.

1. Push the air recirculation button to the OFF position.
2. Turn the air control dial to the position.
3. Turn on the fan control dial.
4. Normally turn the temperature control dial to the midpoint between hot and cold.

Heating and defogging :

This mode heats the interior and defogs the windshield.

1. Push the air recirculation button to the OFF position.
2. Turn the air control dial to the position.
3. Turn on the fan control dial.
4. Turn the temperature control dial to the desired position between the middle and the hot position.

Operating tips :

Clear snow and ice from the wiper blade and air inlet in front of the windshield. This will improve heater operation.

Air conditioner operation

Start the engine, move the fan control dial to the desired (1 to 4) position and push in the air conditioner button to activate the air conditioner. When the air conditioner is on, cooling and dehumidifying functions will be added to the heater operation.

The air conditioner cooling function operates only when the engine is running.

Cooling :

This mode is used to cool and dehumidify.

1. Push the air recirculation button to the OFF position.
2. Turn the air control dial to the position.
3. Turn on the fan control dial.
4. Push on the air conditioner button. The indicator light will come on.
5. Turn the temperature control dial to the desired position.

- For quick cooling when the outside temperature is high, push the air recirculation button to the ON position. Be sure to return the air recirculation button to the OFF position for normal cooling.

Dehumidified heating :

This mode is used to heat and dehumidify.

1. Push the air recirculation button to the OFF position.
2. Turn the air control dial to the position.
3. Turn on the fan control dial.
4. Push on the air conditioner button. The indicator light will come on.
5. Turn the temperature control dial to the desired position.

Dehumidified defogging :

This mode is used to defog the windows and dehumidify.

1. Push the air recirculation button to the OFF position.
2. Turn the air control dial to the position.
3. Turn on the fan control dial.
4. Push on the air conditioner button. The indicator light will come on.
5. Turn the temperature control dial to the desired position.

Operating tips :

- Keep windows closed while the air conditioner is in operation.
- After parking in the sun, drive for two or three minutes with the windows open to vent hot air from the passenger compartment. Then, close the windows. This will allow the air conditioner to cool the interior more quickly.
- **The air conditioning system should be operated for about ten minutes at least once a month. This helps prevent damage to the system due to lack of lubrication.**
- If the coolant temperature gauge exceeds the

hot position, turn the air conditioner off. For additional information, see “If your vehicle overheats” in the “6. In case of emergency” section.

In-cabin microfilter

The air conditioning system is equipped with an in-cabin microfilter which collects dirt, pollen, dust, etc. To make sure air conditioner heats, defogs, and ventilates efficiently, replace the filter regularly. To replace the filter, contact your NISSAN dealer.

The filter should be replaced if air flow is extremely decreased or when windows fog up easily during operating heater or air conditioning system.

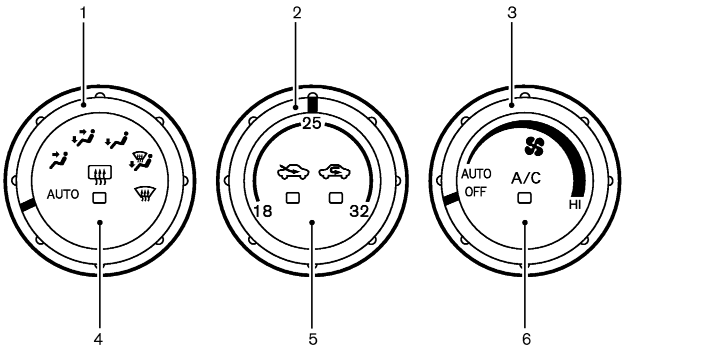

SAA0784

AUTOMATIC TYPE

1. Air flow control dial
2. Temperature control dial*
   * The display of degrees: “18-25-32” is used for °C.
3. Fan control dial
4. Rear window defogger button
   (Refer to the “2. Instruments and controls” section.)
5. Air intake button
   (Air recirculation and Fresh air)
6. A/C (Air conditioner) button

WARNING

- **The air conditioner cooling function operates only when the engine is running.**
- **Do not leave children or adults who would normally require the support of others alone in your vehicle. Pets should not be left alone either. On hot, sunny days, temperatures in a closed vehicle could quickly become**

high enough to cause severe or possibly fatal injuries to people or animals.

- **Using the recirculation mode for long periods may cause the interior air to become stale and the windows to fog up.**
- **Changing heating or air conditioning controls should not be done while driving so that full attention may be given to vehicle operation.**

Automatic operation (AUTO)

Start the engine and operate the controls to activate the air conditioner.

Cooling and/or dehumidified heating :

This mode may be normally used all year round as the system automatically works to keep a constant temperature. Air flow distribution and fan speed are also controlled automatically.

1. Turn the fan control dial and air flow control dial to the AUTO position.
   Then push the A/C button on. (The indicator light will come on.)
2. Turn the temperature control dial to set the desired temperature.

- Adjust the temperature set dial to about 24°C (75°F) for normal operation.
- The temperature of the passenger compartment will be maintained automatically. Air flow distribution and fan speed are also controlled automatically.

Heating (A/C OFF) :

The air conditioner does not activate. When you need to heat only, use this mode.

1. Turn the fan control dial and air flow control dial to the AUTO position.
   Then push the A/C button off. (The A/C button indicator light will go off.)
2. Turn the temperature control dial to set the desired temperature.

- The temperature of the passenger compartment will be maintained automatically. Air flow distribution and fan speed are also controlled automatically.
- Do not set the temperature lower than the outside air temperature. Otherwise the system may not work properly.
- Not recommended if windows fog up.

Dehumidified defrosting or defogging :

1. Turn the fan control dial to the desired position.
2. Turn the air flow control dial to the (DEF) position.
3. Turn the temperature control dial to set the desired temperature.

- To quickly remove ice from the outside of the windows, turn the fan control dial to the maximum position.
- As soon as possible after the windshield is clean, turn the air flow control dial to the AUTO position to return to the auto mode.
- When the air flow control dial is turned to the or position, the air conditioner will automatically be turned on at outside temperatures above −5°C (23°F) to defog the windshield, and the air recirculation mode will automatically be turned off.

  Outside air is drawn into the passenger compartment to improve the defogging performance.

Manual operation

Fan speed control :

Turn the fan control dial to manually control the fan speed.

Turn the dial to the AUTO position to return to automatic control of the fan speed.

Intake air control (Air recirculation/Fresh air) :

Each time the air intake button is pushed, the indicator light on the button will alternate between (Air recirculation) and (Fresh air).

When the indicator light is on, the interior air is recirculated. When the air recirculation mode is selected with the A/C indicator off while the fan control dial is in the AUTO position, the air conditioner will turn on.

When the indicator light is on, the outside air is drawn into the passenger compartment.

- When the air intake button is pushed for longer than 1.5 seconds, both indicator lights (and) will flash twice, and then the intake air will be controlled automatically. During this AUTO mode, the indicator light of the currently selected mode illuminates.
- When the air flow control dial is in the or position, the air recirculation mode does not activate.

Air flow control :

Turning the air flow control dial selects the air outlet to:

- : Air flows from center and side ventilators.
- : Air flows from center and side ventilators and foot outlets.
- : Air flows mainly from foot outlets.
- : Air flows from defroster and foot outlets.
- : Air flows mainly from defroster outlets.

Temperature control :

Turn the temperature control dial to set the desired temperature. The temperature range is between 18°C (65°F) and 32°C (85°F).

To turn the system off :

Turn the fan control dial to the OFF position.

Operating tips :

When the engine coolant temperature and outside air temperature are low, the air flow from the foot outlets may not operate for a maximum of 150 seconds. However, this is not a malfunction. After the coolant temperature warms up, the air flow from the foot outlets will operate normally.

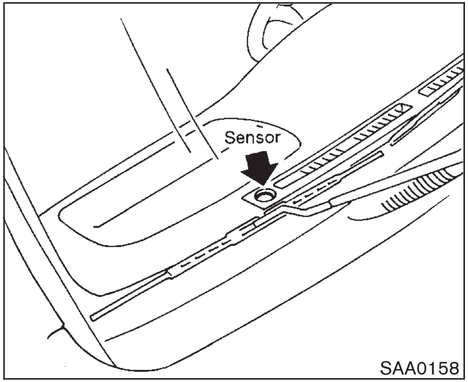

SAA0158

The sensor on the instrument panel helps maintain a constant temperature; do not put anything on or around this sensor.

In-cabin microfilter

The air conditioning system is equipped with an in-cabin microfilter which collects dirt, pollen, dust, etc. To make sure the air conditioner heats, defogs, and ventilates efficiently, replace the filter according to the specified maintenance intervals listed in your Service and Maintenance Guide. To replace the filter, contact your NISSAN dealer.

The filter should be replaced if the air flow decreases significantly or if windows fog up easily when operating the heater or air conditioning system.

SERVICING AIR CONDITIONER

The air conditioning system in your NISSAN vehicle is charged with a refrigerant designed with the environment in mind. **This refrigerant will not harm the earth's ozone layer.** However, special charging equipment and lubricants are required when servicing your NISSAN air conditioner. Using improper refrigerants or lubricants will cause severe damage to your air conditioning system. See "Capacities and recommended fuel/lubricants" in the "9. Technical and consumer information" section for air conditioning system refrigerant and lubricant recommendations.

Your NISSAN dealer will be able to service your environmentally friendly air conditioning system.

WARNING

The air conditioner system contains refrigerant under high pressure. To avoid personal injury, any air conditioner service should be done only by an experienced technician with proper equipment.

AUDIO OPERATION PRECAUTIONS

Cassette player

- **To maintain good quality sound, NISSAN recommends using cassette tapes of 60 minutes or shorter in length.**
- **Cassette tapes should be removed from the player when not in use. Store cassettes in their protective cases and away from direct sunlight, heat, dust, moisture and magnetic sources.**
- **Direct sunlight can cause the cassette to become deformed. The use of deformed cassettes may cause the cassette to jam in the player.**
- **Do not use cassettes with labels which are peeling and loose. If used, the label could jam in the player.**
- **If a cassette has loose tape, insert a pencil through one of the cassette hubs and rewind the tape firmly around the hubs. Loose tape may cause tape jamming and wavering sound quality.**
- **Over a period of time, the playback head, capstan and pinch roller may collect a tape coating residue as the tape is played. This residue accumulation can cause weak or wavering sound, and should be removed periodically with a head cleaning tape. If the residue is not removed periodically, the player may need to be disassembled for cleaning.**

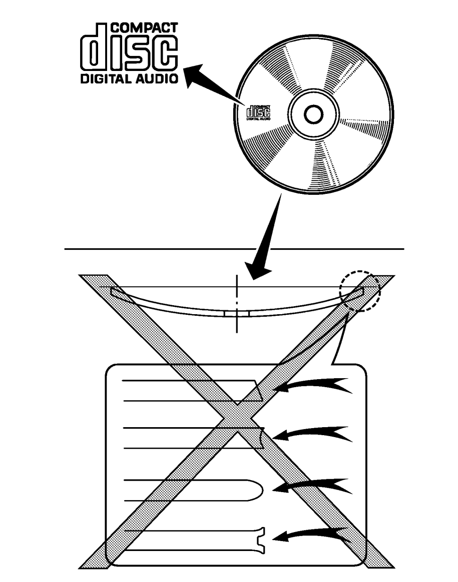

SAA0480

Compact Disc (CD) player

- **Only use high quality 12 cm (4.7 inches) round discs that have the "COMPACT disc DIGITAL AUDIO" logo on the disc or packaging.**

- **During cold weather or rainy days, the player may malfunction due to the humidity. If this occurs, remove the CD and dehumidify or ventilate the player completely.**
- **The player may skip while driving on rough roads.**
- **The CD player sometimes cannot function when the compartment temperature is extremely high. Decrease the temperature before use.**
- **Do not expose the CD to direct sunlight.**
- **CDs that are of poor quality, dirty, scratched, covered with fingerprints, or that have pin holes may not work properly.**
- **The following CDs may not work properly:**
  - **Copy control compact discs (CCCD)**
  - **Recordable compact discs (CD-R)**
  - **Rewritable compact discs (CD-RW)**
- **Do not use the following CDs as they may cause the CD player to malfunction.**
  - **8 cm (3.1 in) discs with an adapter**
  - **CDs that are not round**
  - **CDs with a paper label**
  - **CDs that are warped, scratched, or have abnormal edges**

ANTENNA

Radio reception

Radio reception is affected by station signal strength, distance from radio transmitter, buildings, bridges, mountains and other external influences. Intermittent changes in reception quality normally are caused by these external influences.

Using a cellular phone in or near the vehicle may influence radio reception quality.

Your radio system is equipped with state-of-the-art electronic circuits to enhance radio reception. These circuits are designed to extend reception range, and to enhance the quality of that reception.

However there are some general characteristics of FM and AM radio signals that can affect radio reception quality in a moving vehicle, even when the finest equipment is used. These characteristics are completely normal in a given reception area, and do not indicate any malfunction in your radio system.

Remember that a moving vehicle is not the ideal place to listen to a radio. Because of the movement, reception conditions will constantly change. Buildings, terrain, signal distance and interference from other vehicles can work against ideal reception. Described below are some of the factors that can affect your radio reception.

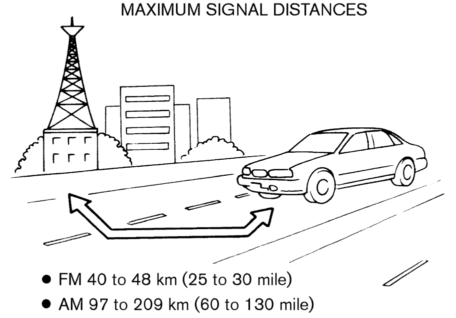

SAA0306B

FM radio reception :

Range: FM range is normally limited to 40 to 48 km (25 to 30 miles), with monaural (single channel) FM having slightly more range than stereo FM. External influences may sometimes interfere with FM station reception even if the FM station is within 40 km (25 miles). The strength of the FM signal is directly related to the distance between the transmitter and receiver. FM signals follow a line-of-sight path, exhibiting many of the same characteristics as light. For example they will reflect off objects.

Fade and drift: As your vehicle moves away from a station transmitter, the signals will tend to fade and/or drift.

Static and flutter: During signal interference from buildings, large hills or due to antenna position, usually in conjunction with increased distance from the station transmitter, static or flutter can be heard. This can be reduced by adjusting the treble control counterclockwise to reduce treble response.

Multipath reception: Because of the reflective characteristics of FM signals, direct and reflected signals reach the receiver at the same time. The signals may cancel each other, resulting in momentary flutter or loss of sound.

AM radio reception :

AM signals, because of their low frequency, can bend around objects and skip along the ground. In addition, the signals can be bounced off the ionosphere and bent back to earth. Because of these characteristics. AM signals are also subject to interference as they travel from transmitter to receiver.

Fading: Occurs while the vehicle is passing through freeway underpasses or in areas with many tall buildings. It can also occur for several seconds during ionospheric turbulence even in areas where no obstacles exist.

Static: Caused by thunderstorms, electrical power lines, electric signs and even traffic lights.

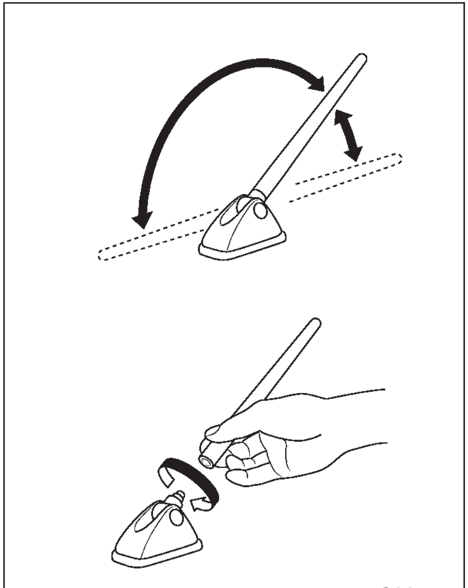

SAA0532

Placing the antenna

You can adjust the antenna to three different positions manually.

Removing the antenna

You can remove the antenna if necessary.

Hold the bottom of the antenna and remove by turning counterclockwise.

CAUTION

- **Be sure that antenna is removed before the vehicle enters an automatic car wash.**
- **Be sure to fold down the antenna before the vehicle enters a garage with a low ceiling.**

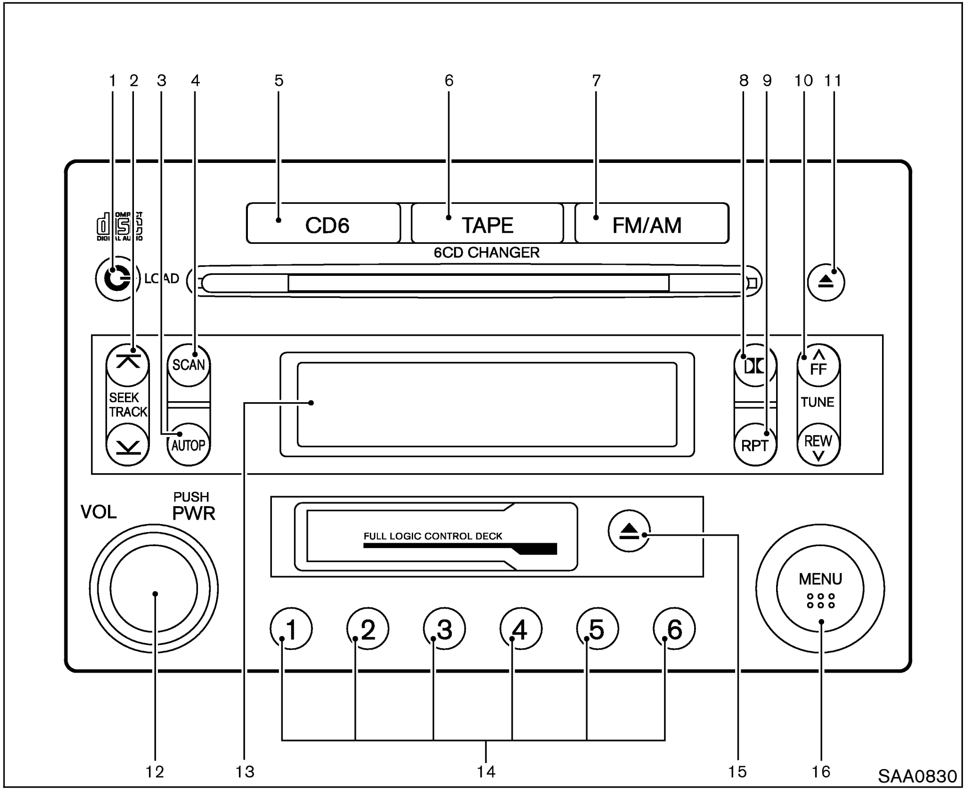

FM-AM RADIO WITH CASSETTE PLAYER AND COMPACT DISC (CD) CHANGER

1. CD LOAD button
2. SEEK/APS REW, APS FF/TRACK ADJUSTING button
3. AUTOP (Automatic preset) button
4. SCAN tuning button
5. CD PLAY button
6. TAPE PLAY button
7. Radio band select button
8. DOLBY button
9. RPT (Repeat) play button
10. RADIO TUNE/FF·REW/AUDIO (Bass, treble, fader, balance) ADJUSTING button
11. CD EJECT button
12. ON·OFF/VOL (Volume) control knob
13. Audio/Clock display
14. Station and preset (radio)/CD insert or CD play select button
15. TAPE EJECT button
16. MENU (Bass, treble, fader, balance, clock) button

Audio main operation

Head unit :

The tape deck employs a permalloy head which allows for improved reproduction of high frequency ranges. Noise is also greatly reduced by the combined use of the Dolby NR (Noise Reduction) system. The auto loudness circuit enhances the low frequency range automatically in both radio reception and tape and CD playback.

ON·OFF/Volume control :

Turn the ignition key to ACC or ON, and then push the ON·OFF/VOL (Volume) control knob while the system is off to call up the mode (radio, tape or CD) which was playing immediately before the system was turned off. When no CD or tape is loaded, the radio will come on. While the system is on, pushing the ON·OFF/VOL control knob turns the system off.

To turn the radio off, press the ON·OFF/VOL control knob.

Turn the ON·OFF/VOL control knob to adjust the volume.

MENU button :

Press the MENU button to change the selecting mode as follows:

BASS → TREBLE → FADER → BALANCE → CLOCK ON/OFF → (clock adjustment) → RADIO → BASS

See "CLOCK" in the "2. Instruments and controls" section for the clock adjustment.

To adjust Bass, Treble, Fader and Balance, press the MENU button until the desired mode (BASS, TREBLE, FADER or BALANCE) appears in the display. Press the TUNE (∨ , ∧) or SEEK (⊻ , ⊼) button to adjust Bass and Treble to the desired level. Use the TUNE or SEEK button also to adjust Fader or Balance modes. Fader adjusts the sound level between the front and rear speakers and Balance adjusts the sound between the right and left speakers.

AUDIO MODE	AUDIO CONTROL ADJUSTING BUTTON		
	∨ or ⊻	Center position	∧ or ⊼
BASS (bass adjustment)	BAS −5	BAS 0	BAS +5
TREBLE (treble adjustment)	TRE −5	TRE 0	TRE +5
FADER (front/rear balance adjustment)	FAD R 5 (FADER Rear)	FAD 0	FAD F 5 (FADER Front)
BALANCE (left/right balance adjustment)	BAL L 5 (BALANCE Left)	BAL 0	BAL R 5 (BALANCE Right)

Once you have adjusted the sound quality to the desired level, press the MENU button repeatedly until the radio, cassette tape or CD display reappears. Otherwise, the radio, cassette tape or CD display will automatically reappear after about 10 seconds.

Radio operation

FM / AM Radio band select :

Pushing the FM/AM button will change the band as follows:

AM → FM1 → FM2 → AM

When FM/AM button is pushed while the ignition switch is in the ACC or ON position, the radio will come on at the station last played.

The last station played will also come on when the ON·OFF/VOL control knob is pushed to ON.

If a compact disc or tape is playing when the FM/AM button is turned to ON, the compact disc or tape will automatically be turned off and the last radio station played will come on.

The FM stereo indicator ST will glow during FM stereo reception. When the stereo broadcast signal is weak, the radio will automatically change from stereo to monaural reception.

∨ ∧ TUNE (Tuning) :

WARNING

The radio should not be tuned while driving so full attention may be given to vehicle operation.

Use the TUNE button ∨ or ∧ for manual tuning. To move quickly through the channels, hold either side of the TUNE button down for more than 0.5 seconds.

⊻ ⊼ SEEK tuning :

Pushing the SEEK button ⊻ or ⊼ tunes from high to low or low to high frequencies and stops at the next broadcasting station.

SCAN SCAN tuning :

Pushing the SCAN tuning button tunes from low to high frequencies and stops at each broadcasting station for 5 seconds. Pushing the button again during this 5 second period will stop SCAN tuning and the radio will remain tuned to that station.

If the SCAN tuning button is not pushed within 5 seconds, SCAN tuning moves to the next station.

Station memory operations :

Twelve stations can be set for the FM band (six for FM1, six for FM2) and six stations can be set for both the AM bands.

1. Tune to the desired station using the SEEK, SCAN or TUNE button.
2. Select the desired station and keep pushing any of the desired station/preset buttons (1 to 6) until a beep sound is heard. (The radio mutes when the station/preset button is pushed.)
3. The channel indicator will then come on and the sound will resume. Memorizing is now complete.
4. Other buttons can be set in the same manner.

If the battery cable is disconnected, or if the fuse blows, the radio memory will be erased. In that case, reset the desired stations.

AUTOP (Automatic preset) button :

To select the preset FM or AM, push the AUTOP button for less than 1.5 seconds.

To preset the FM or AM, push the AUTOP button for more than 1.5 seconds.

Cassette tape player operation

Turn the ignition key to the ACC or ON position, and then lightly insert the cassette tape into the tape door. The cassette tape will be automatically pulled into the player.

The radio or CD will turn off (if it is on) and the cassette tape will begin to play.

CAUTION

Do not force the cassette tape into the tape door. This could cause player damage.

If the system is turned off by pushing the ON·OFF/VOL control knob with the cassette tape still in the player, the tape will resume playing when the system is turned back on.

TAPE PLAY :

- When the TAPE button is pushed with the system turned off and a tape loaded, the system will come on and the tape will play.
- When the TAPE button is pushed with either the radio or compact disc turned on and the tape loaded, the compact disc or the radio will automatically be turned off and the tape will play.
- When the TAPE button is pushed with the TAPE playing, the tape will play the program recorded on the reverse side.

FF (Fast Forward), REW (Rewind) :

Push the (fast forward) button to fast forward the tape. To rewind the tape, push the (rewind) button. Either the FF or REW symbol illuminates on the right side of the display window. To stop the FF or REW function, press the (fast forward) or (rewind) again, or the TAPE button.

APS (Automatic Program Search) FF, APS REW :

When the (APS FF) button is pushed while the tape is being played, the next program will start to play from the beginning. Push the (APS FF) button several times to skip through programs. The tape will advance the number of times the button is pushed (up to nine programs).

When the (APS REW) button is pushed once, the program being played starts over from the beginning. Push the (APS REW) button several times to skip back several selections. The tape will go back the number of times the button is pushed. Either the FF or REW symbol flashes on the display window while searching for the selection.

This system searches for the blank intervals between selections. If there is a blank interval within one program or there is no interval between programs, the system may not stop in the desired or expected location.

SCAN SCAN tuning :

Push the SCAN tuning button while playing a tape, and it stops at the next tape program for 5 seconds. Pushing the button again during this 5 second period will stop SCAN tuning and the tape program is continued. If the SCAN tuning button is not pushed within 5 seconds, SCAN tuning moves to the next tape program.

Dolby NR (Noise Reduction) :

Push the Dolby NR button for Dolby NR encoded tapes to reduce high frequency tape noise. The indicator will come on.

Dolby noise reduction is manufactured under license from Dolby Laboratories Licensing Corporation. Dolby NR and the double-D symbol are trademarks of Dolby Laboratories Licensing Corporation.

Metal or chrome tape usage :

The cassette player will be automatically set to high performance play when playing a metal or chrome cassette tape.

TAPE EJECT :

When this button is pushed with the tape loaded, the tape will be ejected.

When the tape is ejected while it is being played, the system will be turned off.

Compact disc (CD) changer operation

Turn the ignition key to the ACC or ON position, push the LOAD button and insert the compact disc into the slot with the label side facing up.

The compact disc will be guided automatically into the slot and will start playing.

After loading the disc, the number of tracks on the disc will appear on the display.

If the radio or tape is already operating, it will automatically turn off and the compact disc will play.

CAUTION

- **Do not force the compact disc into the slot. This could damage the player.**
- **Do not use 8 cm (3.1 in) discs.**

If the system has been turned off while the compact disc was playing, pushing the ON·OFF/VOL control knob will start the compact disc.

LOAD CD LOAD :

To insert a CD in the CD changer, push the LOAD button for less than 1.5 seconds. Select the loading slot by pushing the CD insert select button (1 to 6), then insert the CD.

To insert 6 CDs to the CD changer in succession, push the LOAD button for more than 1.5 seconds.

The inserted slot numbers will illuminate on the display.

CD6 CD PLAY :

When the CD6 (CD play) button is pushed with the system off and the compact disc loaded, the system will turn on and the compact disc will start to play.

When the CD6 button is pushed with the compact disc loaded with the tape or the radio playing, the tape or radio will automatically be turned off and the compact disc will start to play.

∧ ∨ FF (Fast Forward), REW (Rewind) :

When the ∧ (fast forward) or ∨ (rewind) button is pushed while the compact disc is being played, the compact disc will play while fast forwarding or rewinding. When the button is released, the compact disc will return to normal play speed.

APS (Automatic Program Search) FF, APS REW :

When the (APS FF) button is pushed while the compact disc is being played, the next program from the present one will start to play from its beginning. Push several times to skip through programs. The compact disc will advance the number of times the button is pushed. (When the last program on the compact disc is skipped through, the first program will be played.) When the (APS REW) button is pushed, the program being played returns to its beginning. Push several times to skip back through programs. The compact disc will go back the number of times the button is pushed.

CD PLAY select button :

To change CD, push the CD play select button (1 to 6).

SCAN SCAN tuning :

When the SCAN tuning button is pushed for less than 1.5 seconds while the CD is being played, the beginning of all the CD programs in each track will be played for 10 seconds in sequence.

When the SCAN tuning button is pushed for more than 1.5 seconds while the CD is being played, the first program in all the CDs will be played for 10 seconds.

Pushing the button again during this 10 second period will stop SCAN tuning.

If the SCAN tuning button is not pushed within 10 seconds, SCAN tuning moves to the next disc program.

RPT REPEAT (RPT) :

When the RPT play button is pushed while the

compact disc is being played, the play pattern can be changed as follows:

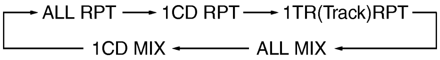

The display shows the following symbols.

(no mark): ALL RPT (Repeat)

1DISC: 1 CD RPT

1: 1 TR (Track) RPT

MIX: ALL MIX

1DISC MIX: 1 CD MIX

CD EJECT :

When the CD EJECT button is pushed with the compact disc loaded, the compact disc will be ejected.

To eject the disc selected by the CD select button, push the EJECT button for less than 1.5 seconds.

To eject all the discs in succession, push the EJECT button for more than 1.5 seconds.

When this button is pushed while the compact disc is being played, the compact disc will come out and the system will turn off.

If the compact disc comes out and is not removed, it will be pulled back into the slot to protect it.

CD IN indicator :

CD IN indicator (inserted slot number) appears on the display when the CD is loaded with the system on.

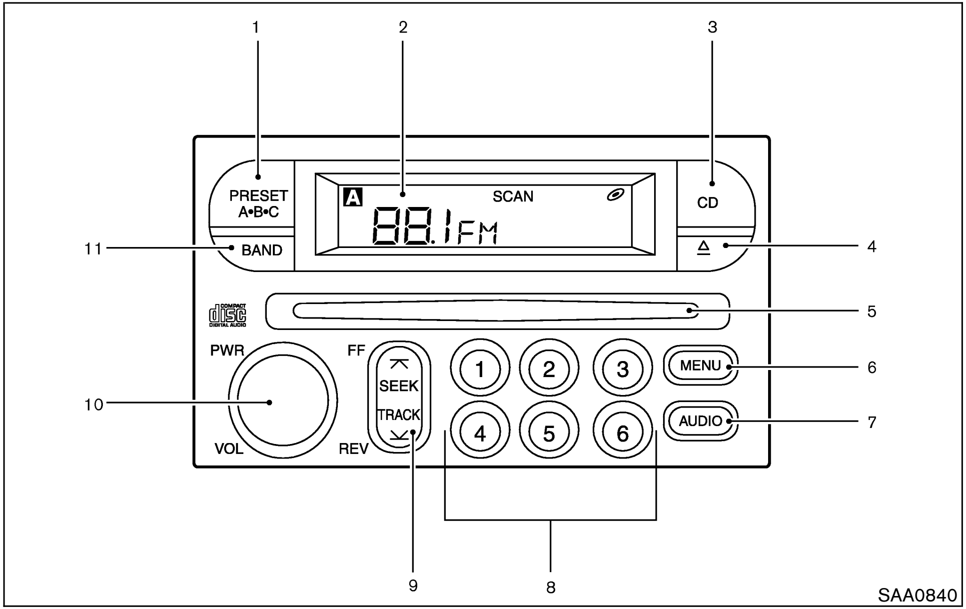

FM-AM RADIO WITH COMPACT DISC (CD) PLAYER

1. PRESET ABC button
2. Display
3. CD button
4. CD eject button
5. CD insert slot
6. MENU button
7. AUDIO button
8. Station select buttons
9. SEEK/TRACK button
10. PWR/VOL control knob
11. BAND select button

Audio main operation

PWR/VOL control knob:

Turn the ignition key to the ACC or ON position, then push the PWR/VOL control knob. If you listen to the radio with the engine not running, turn the key to the ACC position. The mode (radio or CD) that was playing immediately before the system was turned off resumes playing.

When no CD is loaded, the radio comes on. Pushing the PWR/VOL control knob again turns the system off.

Turn the PWR/VOL control knob to the right to increase volume or to the left to decrease volume.

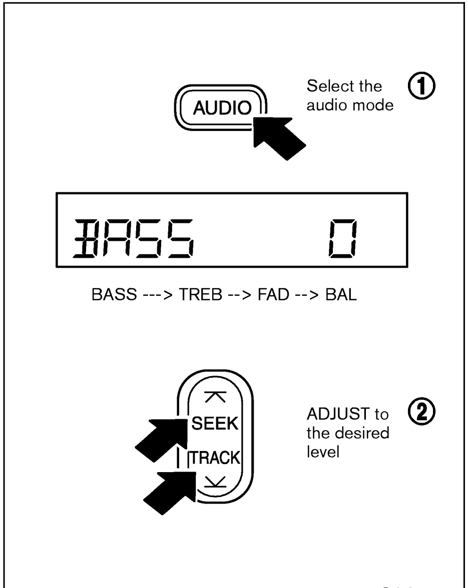

SAA0841

Adjusting tone quality and speaker balance:

To adjust the audio levels for bass, treble, fader, and balance, push the AUDIO button and adjust the level with the SEEK/TRACK button. Press the AUDIO button once for BASS (bass), twice for TREB (treble), 3 times for FAD (fader) and 4 times for BAL (balance). Once the audio level is set the display will return back to radio or CD display mode after 7 seconds or the AUDIO button can be pressed again within 7 seconds to set the next audio level. Pressing the AUDIO button a fifth time will return the display back to radio or CD display mode.

Fader adjusts the sound level between the front and rear speakers, and balance adjusts the sound level between the right and left speakers.

FM-AM radio operation

BAND FM-AM band select :

Push the BAND button to change from AM to FM reception.

The FM stereo indicator, ST, illuminates during FM stereo reception. When the stereo broadcast signal is weak, the radio automatically changes from stereo to monaural reception.

SEEK/manual/SCAN tuning :

When the MENU button is pushed while the radio is playing, tuning mode is cycled between:

SEEK tuning → manual tuning → SCAN mode

"TUNE" and "SCAN" are shown in the display for each mode. No icon is displayed for SEEK mode.

WARNING

The radio should not be tuned while driving so full attention may be given to vehicle operation.

SEEK tuning

Push the SEEK/TRACK tuning button (or) for less than 1.5 seconds. SEEK tuning begins from low to high frequencies or high to low frequencies, depending on which button is pressed, and stops at the next broadcasting station. If using the button, once the highest broadcasting station is reached, the radio continues in the SEEK mode at the lowest broadcasting station. If using the button, once the lowest broadcasting station is reached, the radio continues in the SEEK mode at the highest broadcasting station.

Manual tuning

Use the and buttons for manual tuning. To move quickly through the channels, hold either of the tuning buttons down.

SCAN tuning

Push and hold the SEEK/TRACK tuning button (⩚ or ⩛) for more than 1.5 seconds.

SCAN illuminates in the display window, and the radio station blinks. SCAN tuning begins from low to high frequencies or high to low frequencies, depending on which button is pressed. SCAN tuning stops at each broadcasting station for 5 seconds. When scanning, SCAN is solid and the radio station blinks. When temporarily stopped on a station, SCAN blinks and the station display is solid. Pushing the button again during this 5 second period stops SCAN tuning and the radio remains tuned to that station.

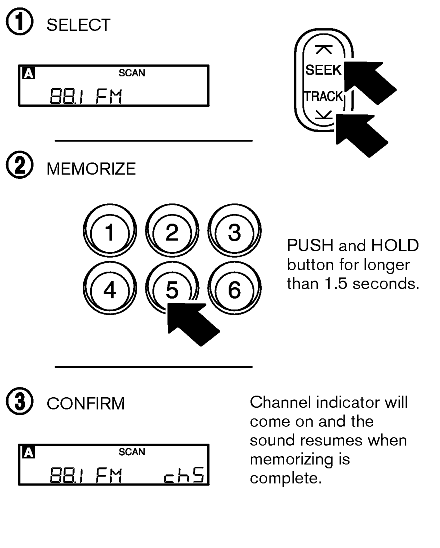

SAA0842

Station memory operations:

Each preset mode (A, B or C) has 6 presets, capable of storing any combination of AM and FM stations.

Press the PRESET ABC button to change between the presets:

A→B→C

The radio displays icon A, B or C to indicate which set of presets is active.

To store a radio station in a preset:

1. Select the desired preset by pressing PRESET ABC button.
2. Tune to the desired station.
3. Press the desired station select button for more than 3 seconds. For example, in the illustrations, ch2 is to be memorized. The radio mutes when the station select button is pushed.
4. When the indicator illuminates in the display and the sound resumes, memorizing is complete.
5. Other station select buttons can be set in the same manner.

If the battery cable is disconnected, or if the radio fuse opens, the radio memory is canceled. In that case, reset the desired stations.

Compact disc (CD) player operation

Turn the ignition key to the ACC or ON position, and carefully insert the compact disc into the

slot with the label side up. The compact disc is automatically pulled into the slot and starts to play.

If the radio is already operating, it automatically turns off and the compact disc begins to play.

CAUTION

Do not force a compact disc into the slot. This could damage the player.

CD CD button :

When the CD button is pushed with a compact disc loaded and the radio playing, the radio turns off and the compact disc starts to play.

Track up/down, FF/REV (rewind) buttons :

Track up/down

When the button is pushed and released while the compact disc is playing, the selection following the present one starts to play from the beginning. Push the button several times to skip several selections. Each time the button is pushed, the CD advances 1 additional selection. The number appears in the display window. (When the last selection on the compact disc is skipped, the first selection is played.)

When the button is pushed and released, the selection being played returns to the beginning. Push the button several times to skip back several selections. Each time the button is pushed, the CD moves back 1 selection.

If the play pattern is in MIX mode when the or button is pushed the next selection will be chosen at random.

FF (Fast Forward)/REV (Reverse)

When the or button is pushed and held while the compact disc is playing, the compact disc plays at an increased speed while fast forwarding or rewinding. When the button is released, the compact disc returns to normal play speed.

MENU MENU :

When the MENU button is pushed while the compact disc is playing, the play pattern changes as follows:

RPT: The current selection is repeated.

MIX: Selections are played at random, not following the sequence on the compact disc. The same program may be repeated twice. If the button is pushed in the MIX mode, selections will be chosen at random.

Blank (no symbol): All selections are played repeatedly in sequence.

When a new compact disc is inserted, the play pattern automatically changes to ALL.

CD EJECT button :

When the button is pushed with a compact disc loaded, the compact disc ejects.

When the button is pushed while the compact disc is playing, the compact disc ejects and the system turns off.

DISC indicator light :

This light comes on when a compact disc is loaded into the player.

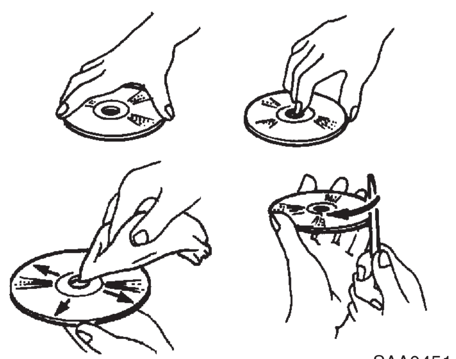
SAA0451

CD CARE AND CLEANING

- Handle a CD by its edges. Never touch the surface of the disc. Do not bend the disc.
- Always place the discs in the storage case when they are not being used.
- To clean a disc, wipe the surface from the center to the outer edge using a clean, soft cloth. Do not wipe the disc using a circular motion.
  Do not use a conventional record cleaner or alcohol intended for industrial use.
- A new disc may be rough on its inner and outer edges. Remove the rough edges using the side of a pen or pencil as illustrated.

CAR PHONE OR CB RADIO

When installing a car phone, CB or ham radio in your NISSAN, be sure to observe the following cautions, otherwise the new equipment may adversely affect the Engine control system and other electronic parts.

WARNING

- **A cellular telephone should not be used while driving so full attention may be given to vehicle operation. Some jurisdictions prohibit the use of cellular telephones while driving.**
- **If you must make a call while your vehicle is in motion, the hands free cellular phone operational mode (if so equipped) is highly recommended. Exercise extreme caution at all times so full attention may be given to vehicle operation.**
- **If a conversation in a moving vehicle requires you to take notes, pull off the road to a safe location and stop your vehicle before doing so.**

CAUTION

- **Keep the antenna as far as possible away from the Engine Control Module (ECM).**
- **Keep the antenna wire more than 20 cm (8 in) away from the electronic control system harness. Do not route the antenna wire next to any harness.**
- **Adjust the antenna standing-wave ratio as recommended by the manufacturer.**
- **Connect the ground wire from the CB radio chassis to the body.**
- **For details, consult a NISSAN dealer.**

MEMO

MEMO

5 Starting and driving

Precautions when starting and driving 5-2
Exhaust gas (Carbon monoxide) 5-2
Three way catalyst 5-3
Avoiding collision and rollover 5-3
On-pavement and offroad driving precautions 5-4
Drinking alcohol/drugs and driving 5-4
Driving safety precautions 5-4
Ignition switch 5-6
Automatic transmission 5-6
Manual transmission 5-7
Key positions 5-8
Nissan Vehicle Immobilizer System 5-8
Before starting the engine 5-9
Starting the engine 5-9
Driving the vehicle 5-10
Automatic transmission 5-10
Manual transmission 5-14
Parking brake 5-15
Cruise control 5-16
Precautions on cruise control 5-16
Cruise control operations 5-17
Break-in schedule 5-18
Increasing fuel economy 5-18
Using four wheel drive (4WD) (if so equipped) 5-19
4WD mode switch operations 5-20
4WD warning light 5-21
Parking/parking on hills 5-23
Power steering 5-24
Brake system 5-24
Braking precautions 5-24
Anti-lock brake system (ABS) 5-25
Vehicle dynamic control (VDC) system (if so equipped) 5-26
Cold weather driving 5-27
Freeing a frozen door lock 5-27
Antifreeze 5-27
Battery 5-27
Draining of coolant water 5-27
Tire equipment 5-28
Special winter equipment 5-28
Driving on snow or ice 5-28
Engine block heater (if so equipped) 5-29

PRECAUTIONS WHEN STARTING AND DRIVING

WARNING

- Do not leave children or adults who would normally require the support of others alone in your vehicle. Pets should not be left alone either. They could accidentally injure themselves or others through inadvertent operation of the vehicle. Also, on hot, sunny days, temperatures in a closed vehicle could quickly become high enough to cause severe or possibly fatal injuries to people or animals.
- Properly secure all cargo to help prevent it from sliding or shifting. Do not place cargo higher than the seatbacks. In a sudden stop or collision, unsecured cargo could cause personal injury.

EXHAUST GAS (Carbon monoxide)

WARNING

Do not breathe exhaust gases; they contain colorless and odorless carbon monoxide. Carbon monoxide is dangerous. It can cause unconsciousness or death.

- If you suspect that exhaust fumes are entering the vehicle, drive with all windows fully open, and have the vehicle inspected immediately.
- Do not run the engine in closed spaces such as a garage.
- Do not park the vehicle with the engine running for any extended length of time.
- Keep the back door closed while driving, otherwise exhaust gases could be drawn into the passenger compartment. If you must drive with the back door open, follow these precautions:
  1. Open all the windows.
  2. Set the air recirculation button off and the fan control at the highest position to circulate the air.
- If electrical wiring or other cable connections must pass to a trailer through the seal on the back door or the body, follow the manufacturer's recommendation to prevent carbon monoxide entry into the vehicle.
- If a special body or other equipment is added for recreational or other usage, follow the manufacturer's recommendation to prevent carbon monoxide entry into the vehicle. (Some recreational vehicle appliances such as stoves, refrigerator, heaters, etc. may also generate carbon monoxide.)
- The exhaust system and body should be inspected by a qualified mechanic whenever:
  a. The vehicle is raised for service.
  b. You suspect that exhaust fumes are entering into the passenger compartment.
  c. You notice a change in the sound of the exhaust system.

d. You have had an accident involving damage to the exhaust system, underbody, or rear of the vehicle.

THREE WAY CATALYST

The three way catalyst is an emission control device installed in the exhaust system. Exhaust gases in the converter are burned at high temperatures to help reduce pollutants.

WARNING

- **The exhaust gas and the exhaust system are very hot. Keep people, animals or flammable materials away from the exhaust system components.**
- **Do not stop or park the vehicle over flammable materials such as dry grass, waste paper or rags. They may ignite and cause a fire.**

CAUTION

- **Do not use leaded gasoline. Deposits from leaded gasoline seriously reduce the three way catalyst's ability to help reduce exhaust pollutants.**
- **Keep your engine tuned up. Malfunctions in the ignition, fuel injection, or electrical systems can cause overrich fuel flow into the three way catalyst, causing it to overheat. Do not keep driving if the engine misfires, or if noticeable loss of performance or other unusual operating conditions are detected. Have the vehicle inspected promptly by a NISSAN dealer.**
- **Avoid driving with an extremely low fuel level. Running out of fuel could cause the engine to misfire, damaging the three way catalyst.**
- **Do not race the engine while warming it up.**
- **Do not push or tow your vehicle to start the engine.**

AVOIDING COLLISION AND ROLLOVER

WARNING

Failure to operate this vehicle in a safe and prudent manner may result in loss of control or an accident.

Be alert and drive defensively at all times. Obey all traffic regulations. Avoid excessive speed, high speed cornering, or sudden steering maneuvers, because these driving practices could cause you to lose control of your vehicle. **As with any vehicle, a loss of control could result in a collision with other vehicles or objects, or cause the vehicle to rollover, particularly if the loss of control causes the vehicle to slide sideways.** Be attentive at all times, and avoid driving when tired. Never drive when under the influence of alcohol or drugs (including prescription or over-the-counter drugs which may cause drowsiness). Always wear your seat belt. See "Seat belts" in the "1. Safety — Seats, seat belts and supplemental restraint system" section. Also instruct your passengers to do so.

Seat belts help reduce the risk of injury in collisions and rollovers. **In a rollover crash, an**

unbelted or improperly belted person is significantly more likely to be injured or killed than a person properly wearing a seat belt.

ON-PAVEMENT AND OFFROAD DRIVING PRECAUTIONS

Utility vehicles have a significantly higher rollover rate than other types of vehicles.

Utility vehicle have a higher ground clearance than passenger vehicles to make them capable of performing in a variety of on-pavement and offroad applications. Higher ground clearance gives the utility vehicle a higher center of gravity than passenger vehicles. An advantage of higher ground clearance is a better view of the road, allowing you to anticipate problems. However, utility vehicles are not designed for cornering at the same speeds as passenger two-wheel drive vehicles any more than low-slung sports cars are designed to perform satisfactorily under offroad conditions. If at all possible, avoid sharp turns or abrupt maneuvers, particularly at high speeds. As with other vehicles of this type, failure to operate this vehicle correctly may result in loss of control or vehicle rollover.

Be sure to read the driving safety precautions later in this section.

DRINKING ALCOHOL/DRUGS AND DRIVING

WARNING

Never drive under the influence of alcohol or drugs. Alcohol in the bloodstream reduces coordination, delays reaction time and impairs judgment. Driving after drinking alcohol increases the likelihood of being involved in an accident injuring yourself and others. Additionally, if you are injured in the accident, alcohol can increase the severity of the injury.

NISSAN is committed to safe driving. You must not drive under the influence of alcohol. Every year thousands of people are injured or killed in alcohol related accidents. Although the local laws vary on what is considered to be legally intoxicated, the fact is that alcohol affects all people differently and most people underestimate the effects of alcohol.

Remember, drinking and driving don't mix!

And that's true for drugs too (over the counter, prescription, and illegal drugs). Don't drive if your ability to operate your vehicle is impaired by alcohol, drugs, or some other physical condition.

DRIVING SAFETY PRECAUTIONS

Please observe the following precautions:

WARNING

- **Drive carefully when off the road and avoid dangerous areas. Every person who drives or rides in this vehicle should be seated with their seat belt fastened. This will keep you and your passengers in position when driving over rough terrain.**
- **Before driving up or down grades, check the road surface for bumps or potholes. Be sure to climb a gentle slope and descend a gentle slope.**
- **Do not drive across steep slopes. Instead drive either straight up or straight down the slopes. Off-road vehicles can tip over sideways much more easily than they can forward or backward.**

- Many hills are too steep for any vehicle. If you drive up them, you may stall. If you drive down them, you may not be able to control your speed. If you drive across them, you may roll over.
- Do not shift gears while driving on downhill grades as this could cause loss of control of the vehicle.
- Be sure to use the engine brake. The foot brake performance may be reduced, resulting in a possible accident.
- Stay alert when driving to the top of a hill. At the top there could be a drop-off or other hazard that could cause an accident.
- If your engine stalls or you cannot make it to the top of a steep hill, never attempt to turn around. Your vehicle could tip or roll over. Always back straight down in R (Reverse) gear. Never back down in N (Neutral) or with the clutch depressed (manual transmission vehicles), using only the brake, as this could cause loss of control.
- Heavy braking going down a hill could cause your brakes to overheat and fade, resulting in loss of control and an accident. Apply brakes lightly and use a low range to control your speed.
- Unsecured cargo can be thrown around when driving over rough terrain. Properly secure all cargo so it will not be thrown forward and cause injury to you or your passengers.
- To avoid raising the center of gravity excessively, do not exceed the rated capacity of the roof rack (if so equipped) and evenly distribute the load. Secure heavy loads in the cargo area as far forward and as low as possible. Do not equip the vehicle with tires larger than specified in this manual. This could cause your vehicle to roll over.
- Do not grip the inside or spokes of the steering wheel when driving off-road. The steering wheel could move suddenly and injure your hands. Instead drive with your fingers and thumbs on the outside of the rim.
- Before operating the vehicle, ensure that the driver and all passengers have their seat belts fastened.
- Always drive with the floor mats in place as the floor may become hot.
- Lower your speed when encountering strong crosswinds. With a higher center of gravity, your NISSAN is more affected by strong side winds. Slower speeds ensure better vehicle control.
- Do not drive beyond the performance of the tires, even with 4WD engaged.

  Accelerating quickly, sharp steering maneuvers or sudden braking may cause loss of control.
- If at all possible, avoid sharp turning maneuvers, particularly at high speeds. Your NISSAN four wheel drive vehicle has a higher center of

gravity than a two wheel drive vehicle. The vehicle is not designed for cornering at the same speeds as conventional two wheel drive vehicles. Failure to operate this vehicle correctly could result in loss of control and/or a roll over accident.

- Always use tires of the same type, size, brand, construction (bias, bias-belted or radial), and tread pattern on all four wheels. Install tire chains on the front wheels when driving on slippery roads and drive carefully.
- Be sure to check the brakes immediately after driving in mud or water. See "Brake system" later in this section for wet brakes.
- Avoid parking your vehicle on steep hills. If you get out of the vehicle and it rolls forward, backward or sideways, you could be injured.
- Whenever you drive off-road through sand, mud or water as deep as the wheel hub, more frequent maintenance may be required. See "Periodic maintenance" in the "Service and Maintenance Guide".
- Do not drive continuously on sandy or muddy roads with the front wheels spinning. The 4WD warning light blinks and the driving mode changes to 2WD. This could reduce traction force remarkably. Be especially careful when towing a trailer. (4WD models)
- Do not use 2-wheel chassis dynamometers or 2-wheel free rollers. (4WD models)
- Never operate the accelerator pedal with any wheels raised and the other wheels on the ground while jacking up or with any wheels on a roller and the other wheels on the ground. Otherwise, the vehicle could lurch forward or backward. (4WD models)
- When a wheel is off the ground due to an unlevel surface, do not spin the wheel excessively. (4WD models)

IGNITION SWITCH

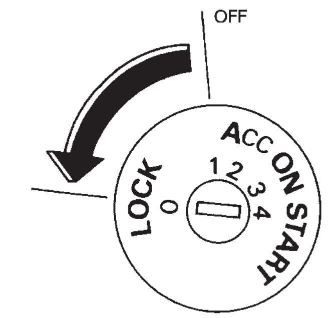

SSD0083F

AUTOMATIC TRANSMISSION

The ignition lock is designed so that the key cannot be turned to LOCK and removed until the selector lever is moved to the P (Park) position.

When removing the key from the ignition, make sure the selector lever is in the P (Park) position.

If the selector lever is not returned to P (Park) position, the key cannot be moved toward LOCK.

When the key cannot be turned toward the LOCK position, proceed as follows to remove the key:

1. Move the selector lever into the P (Park) position.
2. Turn the ignition key slightly in the ON direction.
3. Turn the key toward the LOCK position.
4. Remove the key.

If the key is removed from the ignition switch, the selector lever cannot be moved from P (Park) position. **The selector lever can be moved if the ignition switch is in the ON position and the foot brake pedal is depressed.**

There is an OFF position in between LOCK and ACC, although it does not show on the lock cylinder. When the ignition is in OFF the steering wheel is not locked.

In order for the steering wheel to be locked, it must be turned about 1/6 of a turn clockwise from the straight up position.

To lock the steering wheel, turn the key to the LOCK position. Remove the key. To unlock the steering wheel, insert the key and turn it gently while rotating the steering wheel slightly right and left.

WARNING

Never remove or turn the key to the LOCK position while driving. The steering wheel will lock. This may cause the driver to lose control of the vehicle and could result in serious vehicle damage and/or personal injury.

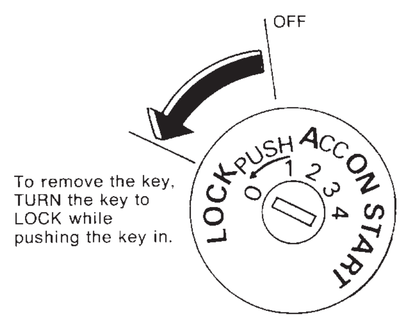

SSD0082C

MANUAL TRANSMISSION

The ignition switch includes an anti-theft steering lock device.

On manual transmission models, the ignition lock is designed so that the key cannot be turned to LOCK and removed unless the key is pushed in while turning the key between ACC and LOCK.

In order for the steering wheel to be locked, it must be turned about 1/6 of a turn clockwise from the straight up position.

To lock the steering wheel, turn the key to the LOCK position. Remove the key.

To unlock the steering wheel, insert the key and turn it gently while rotating the steering wheel slightly right and left.

WARNING

Never remove or turn the key to the LOCK position while driving. The steering wheel will lock. This may cause the driver to lose control of the vehicle and could result in serious vehicle damage and/or personal injury.

KEY POSITIONS

The switch includes an anti-theft steering lock device.

LOCK (Normal parking position) (0)

The ignition key can only be removed when the switch is in this position.

OFF (1)

The engine can be turned off without locking the steering wheel.

ACC (Accessories) (2)

This position activates electrical accessories such as the radio when the engine is not running.

ON (Normal operating position) (3)

This position turns on the ignition system and the electrical accessories.

START (4)

This position activates the starter motor, starting the engine.

NISSAN VEHICLE IMMOBILIZER SYSTEM

The Nissan Vehicle Immobilizer System will not allow the engine to start without the use of the registered Nissan Vehicle Immobilizer System key.

If the engine fails to start using the registered Nissan Vehicle Immobilizer System key, it may be due to interference caused by another Nissan Vehicle Immobilizer System key, an automated toll road device or automated payment device on the key ring. Restart the engine using the following procedures:

1. Leave the ignition switch in the ON position for approximately 5 seconds.
2. Turn the ignition switch to the OFF or LOCK position and wait approximately 10 seconds.
3. Repeat step 1 and 2 again.
4. Restart the engine while holding the device (which may have caused the interference) separate from the registered Nissan Vehicle Immobilizer System key.

If this procedure allows the engine to start, NISSAN recommends placing the registered Nissan Vehicle Immobilizer System key on a separate key ring to avoid interference from other devices.

BEFORE STARTING THE ENGINE

- Make sure the area around the vehicle is clear.
- Maintenance items should be checked periodically, for example, each time you check engine oil.
- Check that all windows and lights are clean.
- Visually inspect tires for their appearance and condition. Also, check tires for proper inflation.
- Lock all doors.
- Position seat and adjust head restraints.
- Adjust inside and outside mirrors.
- Fasten seat belts and ask all passengers to do likewise.
- Check the operation of warning lights when key is turned to the ON (3) position.

STARTING THE ENGINE

1. Apply the parking brake.
2. **Automatic transmission:**

   Move the selector lever to P or N. (P is preferred.)

   The starter is designed so that the starter does not operate unless the selector lever is in either one of the above positions.

   Manual transmission:

   Move the shift lever to the N position. Depress the clutch pedal fully to the floor.

   The starter is designed so that it does not operate unless the clutch pedal is fully depressed.
3. Turn the ignition switch to START (4) to crank the engine **with your foot off the accelerator pedal.** Release the key when the engine starts.

If the engine starts, but fails to run, repeat the above procedure.

- If the engine is very hard to start in extremely cold weather or when restarting, depress the accelerator pedal a little (approximately 1/3 to the floor) and hold it then crank the engine. Release the key and the accelerator pedal when the engine starts.
- If the engine is very hard to start because it is flooded, depress the accelerator pedal all the way to the floor and hold it. Crank the engine for 5 to 6 seconds. After cranking the engine, release the accelerator pedal. Crank the engine **with your foot off the accelerator pedal** by turning the ignition key to START. Release the key when the engine starts. If the engine starts, but fails to run, repeat the above procedure.

CAUTION

Do not operate the starter for more than 15 seconds at a time. If the engine does not start, turn the key off and wait 10 seconds before cranking again, otherwise the starter could be damaged.

4. **Warm-up**

   Allow the engine to idle for at least 30 seconds after starting. Do not race the engine while warming it up. Drive at moderate speed for a short distance first, especially in cold weather.

   In cold weather, keep the engine running for a minimum of 2 - 3 minutes before shutting it off. Starting and stopping the engine over a

short period of time may make the vehicle more difficult to start.

DRIVING THE VEHICLE

AUTOMATIC TRANSMISSION

The automatic transmission in your vehicle is electronically controlled by a transmission control module to produce maximum efficiency and smooth operation.

Shown on the following pages are the recommended operating procedures for this transmission. Follow these procedures for maximum vehicle performance and driving enjoyment.

Starting the vehicle

After starting the engine, fully depress the foot brake pedal and push the selector lever button before shifting the selector lever to the R (Reverse), N (Neutral), D (Drive), 2 (Second) or 1 (Low) position. Be sure the vehicle is fully stopped before attempting to shift the selector lever.

This automatic transmission model is designed so that the foot brake pedal must be depressed before shifting from P (Park) to any drive position while the ignition switch is ON.

The selector lever cannot be moved out of the P (Park) position and into any of the other gear positions if the ignition key is turned to the LOCK, OFF or ACC position or if the key is removed from the switch.

1. Keep the foot brake pedal depressed and push the selector lever button to shift into a driving gear.
2. Release the parking brake and foot brake, then gradually start the vehicle in motion.

WARNING

- **Do not depress the accelerator pedal while shifting from P (Park) or N (Neutral) to R (Reverse) or D (Drive). Always depress the brake pedal until shifting is complete. Failure to do so could cause you to lose control and have an accident.**
- **Cold engine idle speed is high, so use caution when shifting into a forward or reverse gear before the engine has warmed up.**
- **On slippery roads, do not downshift. This may cause a loss of control.**
- **Never shift to P (Park) or R (Reverse) while vehicle is moving forward. Never shift to P (Park) or D (Drive) while vehicle is moving rearward.**

These could cause you to lose control and have an accident.

CAUTION

When stopping the vehicle on an uphill grade, do not hold the vehicle by depressing the accelerator pedal. The foot brakes should be used for this purpose.

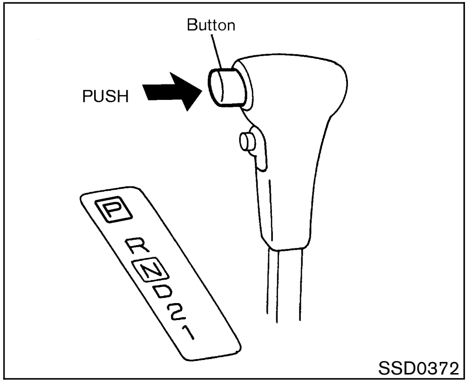

SSD0372

Shifting

After starting the engine, fully depress the brake pedal and shift the selector lever from P (Park) to R (Reverse), D (Drive), or any of the desired shift positions.

Push the button to shift into P (Park) or R (Reverse) or from D (Drive) to 2 (Second). All other positions can be selected without pushing the button.

WARNING

Apply the parking brake if the selector lever is in any position while the engine is not running. Failure to do so could cause the vehicle to move unexpectedly or roll away and result in serious personal injury and/or property damage.

If the key is turned to OFF or ACC for any reason while the vehicle is in R (Reverse), N (Neutral), or any D (Drive) position, the key cannot be turned to LOCK and be removed from the ignition switch. Move the selector lever to P (Park) position, then the key can be turned to LOCK.

P (Park):

Use this selector position when the vehicle is parked or when starting the engine. Make sure the vehicle is completely stopped. **The brake pedal must be depressed to move the selector lever from N (Neutral) or any drive position to P (Park).** Apply the parking brake. When parking on a hill, apply the parking brake first, then move the lever to the P (Park) position.

CAUTION

Use this position only when the vehicle is completely stopped.

R (Reverse):

Use this position to back up. Always be sure the vehicle is completely stopped when selecting R (Reverse). **The brake pedal must be depressed to move the selector lever from P (Park) to R (Reverse).**

N (Neutral):

Neither forward nor reverse is engaged. The engine can be started in this position. You may shift to N (Neutral) and restart a stalled engine while the vehicle is moving.

D (Drive):

Use this position for all normal forward driving.

2 (Second):

Use this position for hill climbing or engine braking on downhill grades.

Do not shift into the 2 position at speeds above 110 km/h (69 MPH). Do not exceed 110 km/h (69 MPH) in the 2 position.

1 (Low):

Use this position for maximum engine braking on steep downhill gradients/climbing steep slopes and whenever approaching sharp bends. Do not use the L position in any other circumstances.

Shift from the D to 2 or 1 position after releasing the accelerator pedal.

Do not shift into the 1 position at speeds above 60 km/h (38 MPH). Do not exceed 60 km/h (38 MPH) in the 1 position.

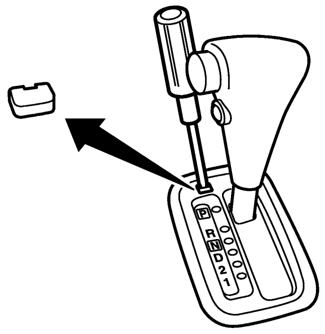

SSD0370

Shift lock release

If the battery charge is low or discharged, the selector lever may not be moved from the P (Park) position even with the brake pedal depressed.

To move the selector lever, depress the brake pedal, remove the cover using a suitable tool and push the shift lock release button. The selector lever can be moved to N (Neutral). This allows the vehicle to be moved if the battery is discharged.

If the selector lever cannot be moved out of P (Park), have your NISSAN dealer check the

automatic transmission as soon as possible.

Accelerator downshift
— In D position —

For rapid passing or hill climbing, fully depress the accelerator pedal to the floor. This shifts the transmission down into lower range, depending on the vehicle speed.

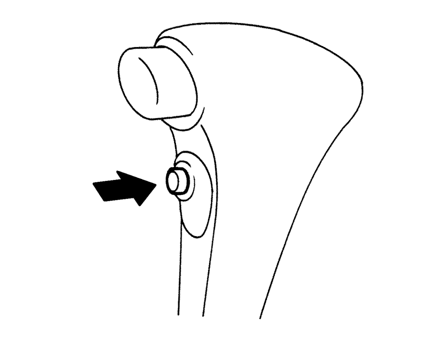

SSD0371

Overdrive switch

Each time your vehicle is started, the transmission is automatically “reset” to overdrive ON.

ON: With the engine running and the shift selector lever in the D (Drive) position, the transmission upshifts into Overdrive as vehicle speed increases.

Overdrive does not engage until the engine has reached operating temperature.

OFF: For driving up and down long slopes where engine braking is necessary push the Overdrive switch once. The O/D OFF indicator light in the instrument panel comes on at this time.

When cruising at a low speed or climbing a gentle slope, you may feel uncomfortable shift shocks as the transmission shifts into and out of Overdrive repeatedly. In this case, depress the Overdrive switch to turn the Overdrive off. The O/D OFF indicator light in the instrument panel comes on at this time.

When driving conditions change, depress the Overdrive switch to turn the Overdrive on.

Remember not to drive at high speeds for extended periods of time with the Overdrive off. This reduces fuel economy.

Fail-safe

If the vehicle is driven under extreme conditions, such as excessive wheel spinning and subsequent hard braking, the Fail-safe system may be activated. This will occur even if all electrical circuits are functioning properly. In this case, turn the ignition key OFF and wait for 3 seconds. Then turn the key back to the ON position. The vehicle may return to its normal operating condition. If it does not return to its normal operating condition have your NISSAN dealer check the transmission and repair if necessary.

WARNING

When the high fluid temperature protection mode or fail-safe operation occurs, vehicle speed may be gradually reduced. On highways, the reduced speed may be lower than other traffic which could increase the chance of a collision. Be especially careful when driving. If necessary, pull to the side of the road at a safe place and allow the transmission to return to normal operation, or have it repaired if necessary.

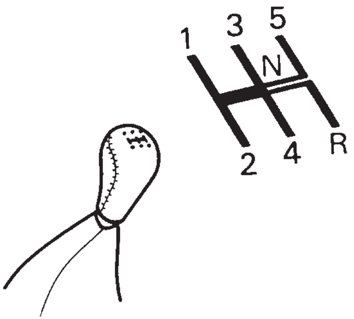

SSD0002

MANUAL TRANSMISSION

Starting the vehicle

1. Depress the clutch pedal to the floor and move the shift lever to the 1 (Low gear) or R (Reverse) position.
2. Slowly depress the accelerator pedal, releasing the clutch pedal and parking brake lever at the same time.

Shifting

To change gears, or when upshifting or downshifting, depress the clutch pedal fully, shift into the appropriate gear, then release the clutch slowly and smoothly.

To ensure smooth gear changes, fully depress the clutch pedal before operating the shift lever. If the clutch pedal is not fully depressed before the transmission is shifted, a gear noise may be heard. Transmission damage could occur.

Start the vehicle in 1st gear and shift to 2nd, 3rd, 4th and 5th gear in sequence according to the vehicle speed.

You cannot shift directly from 5th gear into R (Reverse). First shift into the N (Neutral) position, then into R.

If it is difficult to move the shift lever into R or 1st, shift to N, then release the clutch pedal. Fully depress the clutch pedal again and shift into R or 1st again.

WARNING

- **Do not downshift abruptly on slippery roads. This may cause a loss of control.**
- **Do not over-rev the engine when shifting to a lower gear. This may cause a loss of control or engine damage.**

> **⚠ CAUTION**
>
> - **Do not rest your foot on the clutch pedal while driving. This may damage the clutch.**
> - **Fully depress the clutch pedal before shifting to help prevent transmission damage.**
> - **Stop your vehicle completely before shifting into R (Reverse).**
> - **When the vehicle is stopped for a period of time, for example at a stop light, shift to N (Neutral) and release the clutch pedal with the foot brake applied.**

Suggested upshift speeds

Shown below are suggested vehicle speeds for shifting into a higher gear. These suggestions relate to fuel economy and vehicle performance. Actual upshift speeds will vary according to road conditions, the weather and individual driving habits.

Gear change	km/h (MPH)
1st to 2nd	24 (15)
2nd to 3rd	40 (25)
3rd to 4th	64 (40)
4th to 5th	72 (45)

Suggested maximum speed in each gear

Downshift to a lower gear if the engine is not running smoothly, or if you need to accelerate.

Do not exceed the maximum suggested speed (shown below) in any gear. For level road driving, use the highest gear suggested for that speed. Always observe posted speed limits, and drive according to the road conditions which will ensure safe operation. Do not over-rev the engine when shifting to a lower gear as it may cause engine damage or loss of vehicle control.

Gear	km/h (MPH)
1st	45 (28)
2nd	85 (53)
3rd	135 (84)
4th to 5th	— (—)

PARKING BRAKE

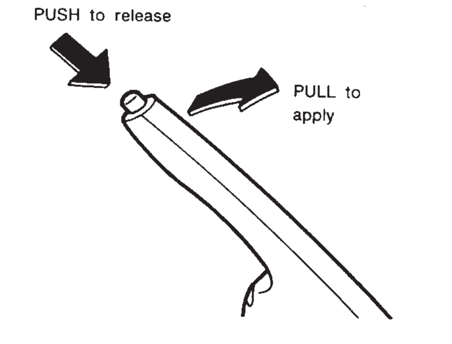

PD1001M

To apply: pull the lever up.

To release:

1. Firmly apply foot brake.
2. **Manual transmission models:**

   Place the gearshift lever in the N (Neutral) position.

   Automatic transmission models:

   Move the selector lever to the P (Park) position.
3. While pulling up on the lever slightly, push the button and lower completely.

4. Before driving, be sure the brake warning light goes out.

WARNING

- **Be sure the parking brake is fully released before driving. Failure to do so can cause brake failure and lead to an accident.**
- **Do not release the parking brake from outside the vehicle.**
- **Do not use the gear shift in place of the parking brake. When parking, be sure the parking brake is fully engaged.**
- **Do not leave children unattended in a vehicle. They could release the parking brake and cause an accident.**

CRUISE CONTROL

WARNING

Do not use the cruise control when driving under the following conditions:

- **it is not possible to keep the vehicle at a set speed.**
- **in heavy traffic or in traffic that varies in speed.**
- **on winding or hilly roads.**
- **on slippery roads (rain, snow, ice, etc.).**
- **in very windy areas.**

Doing so could cause a loss of vehicle control and result in an accident.

CAUTION

On manual transmission models, do not shift into N (Neutral) without depressing the clutch pedal when the cruise control is set. Should this occur, depress the clutch pedal and turn the main switch off immediately. Failure to do so may cause engine damage.

PRECAUTIONS ON CRUISE CONTROL

- If the cruise control system malfunctions, it cancels automatically. The SET indicator light on the meter panel then blinks to warn the driver.
- If the SET indicator light blinks, turn the cruise control main switch off and have the system checked by your NISSAN dealer.
- The SET indicator light may blink when the cruise control main switch is turned on while pushing the ACCEL/RES, SET/COAST, or CANCEL switch (located on the steering wheel). To properly set the cruise control system, perform the preceding steps in the order indicated.

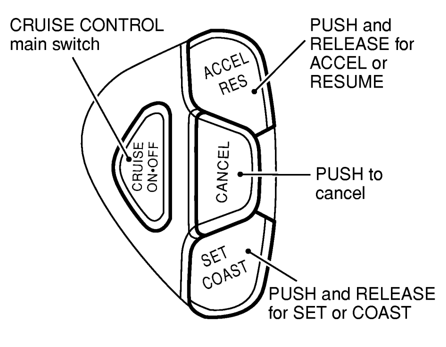

CRUISE CONTROL OPERATIONS

The cruise control allows driving at a speed between 40 to 144 km/h (25 to 89 MPH) without keeping your foot on the accelerator pedal.

To turn on the cruise control, push the main switch on. The CRUISE indicator light on the meter panel will come on.

To set at cruising speed, accelerate your vehicle to the desired speed, push the SET/COAST switch and release it. (The SET indicator light will come on.) Take your foot off the accelerator pedal. Your vehicle will maintain the set speed.

- **To pass another vehicle,** depress the accelerator pedal. When you release the pedal, the vehicle will return to the previously set speed.
- The vehicle may not maintain the set speed when going up or down steep hills. If this happens, drive without the cruise control.

To cancel the preset speed, follow either of these three methods:

a) Push the cancel switch; The SET indicator light will go out.

b) Tap the brake pedal; The SET indicator light will go out.

c) Turn the main switch off. Both the CRUISE indicator and SET indicator lights will go out.

- If you depress the brake pedal while pushing the ACCEL/RES set switch and reset at the cruising speed, turn the main switch off once and then turn it on again.
- The cruise control will automatically be cancelled if the vehicle slows down below approximately 13 km/h (8 MPH).
- Move the selector lever to N (Neutral) position. The SET indicator light will go out.

To reset at a faster cruising speed, use one of the following three methods:

a) Depress the accelerator pedal. When the vehicle attains the desired speed, push and release the SET/COAST switch.

b) Push and hold the ACCEL/RES set switch. When the vehicle attains the speed you desire, release the switch.

c) Push, then quickly release the ACCEL/RES set switch. Each time you do this, the set speed will increase by about 1.6 km/h (1 MPH).

To reset at a slower cruising speed, use one of the following three methods:

a) Lightly tap the brake pedal. When the vehicle attains the desired speed, push the SET/COAST switch and release it.

b) Push and hold the SET/COAST switch. Release the switch when the vehicle slows down to the desired speed.

c) Push, then quickly release the SET/COAST switch. Each time you do this, the set speed will decrease by about 1.6 km/h (1 MPH).

To resume the preset speed, push and release the ACCEL/RES set switch. The vehicle will resume the last set cruising speed when the vehicle speed is over 40 km/h (25 MPH).

BREAK-IN SCHEDULE

During the first 2,000 km (1,200 miles), follow these recommendations to obtain maximum engine performance and ensure the future reliability and economy of your new vehicle. Failure to follow these recommendations may result in shortened engine life and reduced engine performance.

- Avoid driving for long periods at constant speed, either fast or slow. Do not run the engine over 4,000 rpm.
- Do not accelerate at full throttle in any gear.
- Avoid quick starts.
- Avoid hard braking as much as possible.
- Do not tow a trailer for the first 800 km (500 miles).

INCREASING FUEL ECONOMY

- Accelerate slowly and smoothly. Maintain cruising speeds with a constant accelerator position.
- Drive at moderate speeds on the highway. Driving at high speed will lower fuel economy.
- Avoid unnecessary stopping and braking. Maintain a safe distance behind other vehicles.
- Use a proper gear range which suits road conditions. On level roads, shift into high gear as soon as possible.
- Avoid unnecessary engine idling.
- Keep your engine tuned up.
- Follow the recommended periodic maintenance schedule.
- Keep the tires inflated at the correct pressure. Low pressure will increase tire wear and waste fuel.
- Keep the front wheels in correct alignment. Improper alignment will cause not only tire wear but also lower fuel economy.
- Air conditioner operation lowers fuel economy. Use the air conditioner only when necessary.
- When cruising at highway speeds, it is more economical to use the air conditioner and leave the windows closed to reduce drag.

USING FOUR WHEEL DRIVE (4WD) (if so equipped)

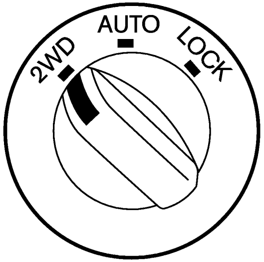

4WD MODE SWITCH

The ALL MODE 4X4 system is used to select 2WD, AUTO or LOCK depending on the driving conditions.

ALL MODE 4X4 system electronically controls the coupling. Move the 4WD mode switch to select 2WD, AUTO or LOCK.

WARNING

A vehicle equipped with 4WD (Four Wheel Drive) should never be tested using a two wheel dynamometer, or similar equipment. Make sure you inform the test facility personnel that your vehicle is a 4WD equipped vehicle before it is placed on a dynamometer. Failure to do so may result in transmission damage or unexpected vehicle movement which could result in serious vehicle damage or personal injury.

4WD mode switch	Wheels driven	4WD mode indicator light (4WD , 4WD LOCK)	Use conditions
2WD	Front wheels The wheel drive mode is in 2WD when driving on the normal road.*1	Goes off	For driving on dry, paved roads (Economy drive)
AUTO	Distribution of torque to the front and rear wheels changes automatically, depending on road conditions encountered [ratio; 100 : 0 (2WD) → 50 : 50 (4WD)]. This results in improved driving stability.	4WD	For driving on paved or slippery roads
LOCK	Four wheels*2	4WD / 4WD LOCK	For driving on rough roads

*1: 2WD mode may change to 4WD mode automatically during quick acceleration.
The 4WD mode indicator light does not illuminate.
*2: LOCK mode will change to AUTO mode automatically, when the vehicle is accelerated.

SSD0223A

4WD MODE SWITCH OPERATIONS

The 4WD mode switch electronically controls the coupling. Move the switch to select between each mode, 2WD, AUTO and LOCK, depending on driving conditions.

WARNING

Depending on the driving condition, the 4WD mode may automatically change from 2WD to 4WD even when the 2WD mode switch is selected.*

Do not start engine while in the 2WD, AUTO or LOCK mode in the following cases:

- **When on a free-roller or jacking up the front tires with the rear tires on the ground.**
- **When towing with the rear tires raised from the ground.**

* The 4WD mode indicator light does not illuminate even if the mode automatically changes from 2WD to 4WD while driving.

4WD shift tips

- If the 4WD mode switch is operated while making a turn, accelerating or decelerating, or if the key switch is turned off while in the AUTO or LOCK, you may feel a jerk. This is not abnormal.
- The oil temperature of power train parts will increase if the vehicle is continuously operated under conditions where the difference in rotation between the front and rear wheels is large (wheels slip) by driving the vehicle

off-road through sand, mud or water or freeing a stuck vehicle. In this case, the 4WD warning light blinks rapidly and the 4WD mode changes to the 2WD mode to protect the power train parts. If you stop driving with the engine idling and wait until the warning light stops blinking, the 4WD returns to the AUTO mode.

- Brake distance in the 4WD mode is the same as 2WD.
- Even if the mode automatically changes to the AUTO mode when driving with the LOCK mode selected, the indicator light stays in the LOCK mode.

⚠ WARNING

- **Do not place a 4WD equipped vehicle on a two wheel dynamometer or raise two wheels off the ground and shift the transmission to any D (drive) or R (reverse) position. Doing so may result in transmission damage or unexpected vehicle movement which could result in serious vehicle damage or personal injury.**
- **When driving straight, shift the 4WD lock switch to 2WD, AUTO or LOCK. Do not operate the 4WD lock switch when making a turn or reversing.**
- **Do not operate the 4WD mode switch (2WD, AUTO and LOCK) with the front wheel spinning.**
- **Engine idling speed is high while warming up the engine. Be especially careful when starting or driving on slippery surfaces with the 4WD lock switch set in AUTO.**

Warning light	Comes on or blinks when
4WD Comes on	There is a malfunction in the four wheel drive system.
4WD Blinks rapidly	The power-train oil temperature rises abnormally.
4WD Blinks slowly	The difference in wheel rotation is large.

SSD0142B

4WD WARNING LIGHT

The 4WD warning light is located in the instrument panel.

The 4WD warning light comes on when the key

switch is turned to ON. It turns off soon after the engine is started.

If any malfunction occurs in the 4WD system when the key switch is ON, the warning light will either remain illuminated or blink.

High-temperature power-train oil makes the warning light blink rapidly (about twice per second). The driving mode will change to 2WD. AUTO mode may change to LOCK mode before the warning light blinks. This is normal. If the warning light blinks rapidly during operation, stop the vehicle in a safe place immediately. Then if the light goes off after a while, you can continue driving.

A large difference between the diameters of front and rear wheels will make the warning light blink slowly (about once per two seconds). Change the 4WD mode switch into 2WD and do not drive fast.

WARNING

Do not attempt to test a 4WD equipped vehicle with two wheels on a two wheel dynamometer and the other two wheels raised. Doing so may result in transmission damage or unexpected vehicle movement which could result in serious vehicle damage or personal injury.

CAUTION

- **If the warning light comes on while driving, 4WD mode will be changed to 2WD mode. Reduce the vehicle speed and have your vehicle checked by a NISSAN dealer as soon as possible.**
- **When the warning light comes on, the 2WD mode may be engaged even if the 4WD mode switch is in AUTO or LOCK. Be especially careful when driving.**
- **Never drive on dry hard surface roads in the LOCK mode, as this will overload the power-train and may cause a serious malfunction.**
- **If the warning light is still on, have your vehicle checked by a NISSAN dealer as soon as possible.**
- **The power-train may be damaged if you continue driving with the warning light blinking rapidly.**

PARKING/PARKING ON HILLS

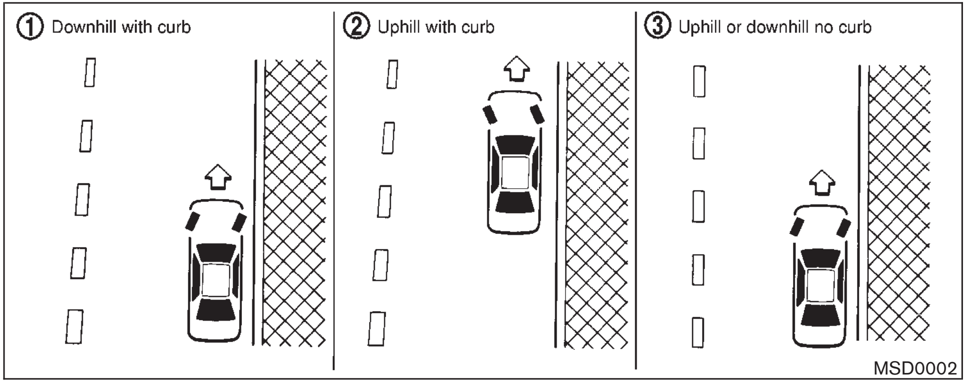

⚠ WARNING

- **Do not stop or park the vehicle over flammable materials such as dry grass, waste paper or rags. They may ignite and cause a fire.**
- **Never leave the engine running while the vehicle is unattended.**
- **Never leave children unattended in the vehicle.**

1. Firmly apply the parking brake.
2. **Manual transmission models:**

   Place the gearshift lever in the R (Reverse) position. When parking on an uphill grade, place the gearshift lever in the 1st position.

   Automatic transmission models:

   Move the automatic transmission select lever to the P (Park) position.

⚠ WARNING

- **Safe parking procedures require that both the parking brake be set and the transmission be placed into P (Park) for automatic transmission models or in an appropriate gear for manual transmission models. Failure to do so could cause the vehicle to move unexpectedly or roll away and result in an accident.**
- **Make sure the automatic transmission selector lever has been pushed as far forward as it can go and cannot be moved without depressing the button on the side of the lever.**

3. To help prevent the vehicle from rolling into the street when parked on a sloping drive way, it is a good practice to turn the wheels as illustrated.

- HEADED DOWNHILL WITH CURB: ①

  Turn the wheels into the curb and move the vehicle forward until the curb side wheel gently touches the curb.

- HEADED UPHILL WITH CURB: ②

  Turn the wheels away from the curb and move the vehicle back until the curb side wheel gently touches the curb.

- HEADED UPHILL OR DOWNHILL, NO CURB: ③

  Turn the wheels toward the side of the road so the vehicle will move away from the center of the road if it moves.

4. Turn the ignition key to the LOCK position and remove the key.

POWER STEERING

The power assisted steering is designed to use a hydraulic pump, driven by the engine, to assist steering.

If the engine stops or drive belt breaks, you will still have control of the vehicle. However, much greater steering effort is needed, especially in sharp turns or at low speeds.

WARNING

If the engine is not running or is turned off while driving, the power assist for the steering will not work. Steering will be much harder to operate.

BRAKE SYSTEM

BRAKING PRECAUTIONS

The brake system has two separate hydraulic circuits. If one circuit malfunctions, you will still have braking at two wheels.

Vacuum assisted brake

The brake booster aids braking by using engine vacuum. If the engine stops, you can stop the vehicle by depressing the brake pedal. However, greater foot pressure on the brake pedal will be required to stop the vehicle and the stopping distance will be longer.

Wet brakes

When the vehicle is washed or driven through water, the brakes may get wet. As a result, your braking distance will be longer and the vehicle may pull to one side during braking.

To dry brakes, drive the vehicle at a safe speed while lightly tapping the brake pedal to heat-up the brakes. Do this until the brakes return to normal. Avoid driving the vehicle at high speeds until the brakes function correctly.

Using the brakes

Avoid resting your foot on the brake pedal while driving. This will cause overheating of the brakes, increases wear on the brake linings and pads, and reduces gas mileage.

To help save the brakes and to prevent the brakes from overheating, reduce speed and downshift to a lower gear before going down a slope or long grade. Overheated brakes may reduce braking performance and could result in loss of vehicle control.

WARNING

- **While driving on a slippery surface, be careful when braking, accelerating or downshifting. Abrupt braking or accelerating could cause the wheels to skid and result in an accident.**
- **If the engine is not running or is turned off while driving, the power assist for the brakes will not work. Braking will be harder.**

ANTI-LOCK BRAKE SYSTEM (ABS)

The anti-lock brake system controls the brakes at each wheel so the wheels will not lock when braking abruptly or when braking on slippery surfaces. The system detects the rotation speed at each wheel and varies the brake fluid pressure to prevent each wheel from locking and sliding. By preventing wheel lockup, the system helps the driver maintain steering control and helps to minimize swerving and spinning on slippery surfaces.

Using the system

Depress the brake pedal and hold it down.

WARNING

Do not pump the brake pedal. Doing so may result in increased stopping distances.

Normal operation

The anti-lock brake system will not operate at speeds below 5 to 10 km/h (3 to 6 MPH) to completely stop the vehicle. (The speeds will vary according to road conditions.) When the anti-lock system senses that one or more wheels are close to locking up, the actuator (under the hood) rapidly applies and releases hydraulic pressure (like pumping the brakes very quickly). While the actuator is working, you may feel a pulsation in the brake pedal and hear a noise or vibration from the actuator under the hood. This is normal and indicates that the anti-lock system is working properly. However, the ABS operation may indicate that road conditions are hazardous and extra care is required while driving.

Self-test feature

The anti-lock brake system consists of electronic sensors, electric pumps, and hydraulic solenoids controlled by a computer. The computer has a built-in diagnostic feature that tests the system each time you start the engine and move the vehicle at a low speed in forward or reverse. When the self-test occurs, you may hear a clunk noise and/or feel a pulsation in the brake pedal. This is normal and is not an indication of any malfunction. If the computer senses any malfunction, it switches the anti-lock brake system OFF and turns on the ABS warning light in the meter. The brake system will then behave normally, but without anti-lock assistance.

If the light comes on during the self check, or while you are driving, you should take your vehicle to your NISSAN dealer for repair at your earliest convenience.

WARNING

The anti-lock brake system is a sophisticated device, but it cannot prevent ac-

cidents resulting from careless or dangerous driving techniques. It can help maintain vehicle control during braking on slippery surfaces, but remember that the stopping distance on slippery surfaces will be longer than on normal surfaces, even with the anti-lock system. Stopping distances may also be longer on rough, gravel or snow covered roads, or if you are using tire chains. Always maintain a safe distance from the vehicle in front of you. Ultimately, the responsibility for safety of self and others rests in the hands of the driver.

Tire type and condition of tires may also affect braking effectiveness.

- **When replacing tires, install the specified size of tires on all four wheels.**
- **When installing a spare tire, make sure it is the proper size and type as specified on the tire placard. See "Vehicle identification" in the "9. Technical and consumer information" section for tire placard location.**

VEHICLE DYNAMIC CONTROL (VDC) SYSTEM (if so equipped)

When driving on slippery surfaces or suddenly avoiding obstacles on roads, the vehicle might swerve or slip. With the vehicle dynamic control (VDC) system, sensors detect these movements and control the braking and engine output to help improve vehicle stability while driving.

- When the VDC system is operating, the slip indicator in the instrument panel blinks.
- When only the traction control system portion of the VDC system is operating, the slip indicator in the instrument panel blinks.
- If the slip indicator blinks, the vehicle is under slippery conditions. Be sure to drive carefully. See "Slip indicator light", and "VDC off indicator light" in the "2. Instruments and controls" section.
- Indicator light — If a malfunction occurs in the system, the SLIP and VDC OFF indicator lights illuminate in the instrument panel. As long as these warning lights are illuminated, the vehicle dynamic control is cancelled.

The VDC system uses an Active Brake Limited Slip (ABLS) system to improve vehicle traction. The ABLS system works when one of the driving wheels is spinning on a slippery surface. The ABLS system brakes the spinning wheel which distributed the driving power to the other drive wheel. If the vehicle is operated with the vehicle dynamic control system turned off, all VDC and TCS functions will be turned off. The ABLS system and ABS will still operate with the ABS activated, the slip indicator light will blink and you may hear a "clunk" noise and/or feel a pulsation in the brake pedal. This is normal and is not an indication of a malfunction.

While the VDC system is operating, you may feel a pulsation in the brake pedal and hear a noise or vibration from under the hood. This is normal and indicates that the VDC system is working properly.

The VDC system computer has a built-in diagnostic feature that tests the system each time you start the engine and move the vehicle at a low speed forward or backward. When the self-test occurs, you may hear a "clunk" noise and/or feel a pulsation in the brake pedal. This is normal and is not an indication of a malfunction.

WARNING

- **The vehicle dynamic control system is designed to help improve driving stability but does not prevent accidents due to abrupt steering operation at high speeds or by careless or dangerous driving techniques. Re-**

duce vehicle speed and be especially careful when driving and cornering on slippery surfaces and always drive carefully.

- **If engine related parts such as muffler are not standard equipment or are extremely deteriorated, the vehicle dynamic control off indicator light and slip indicator light may come on.**
- **Do not modify the vehicle's suspension. The vehicle dynamic control system may not operate correctly.**
- **If suspension parts such as shock absorbers, struts, springs and bushings are not standard equipment or are extremely deteriorated, the vehicle dynamic control system may not operate properly and the vehicle dynamic control off indicator light may come on.**
- **When driving on extremely inclined surfaces such as higher banked corners, the vehicle dynamic control system may not operate properly and the vehicle dynamic control off indicator light may come on. Do not drive on these types of roads.**
- **If the tires other than the recommended ones are used, the vehicle dynamic control system may not operate properly or the vehicle dynamic control off indicator light may come on.**
- **The vehicle dynamic control system is not a substitute for winter tires or tire chains on a snow covered road.**
- **When driving on unstable surfaces such as a turntable, ferry, elevator or ramp, the vehicle dynamic control off indicator light may illuminate. This is not a malfunction. Restart the engine after driving onto a stable surface.**

COLD WEATHER DRIVING

FREEING A FROZEN DOOR LOCK

To prevent a door lock from freezing, apply de-icer or glycerin to it through the key hole. If the lock becomes frozen, heat the key before inserting it into the key hole.

ANTIFREEZE

In the winter when it is anticipated that the temperature will drop below 0°C (32°F), check antifreeze to assure proper winter protection. For additional information, see "Engine cooling system" in the "8. Maintenance and do-it-yourself" section.

BATTERY

If the battery is not fully charged during extremely cold weather conditions, the battery fluid may freeze and damage the battery. To maintain maximum efficiency, the battery should be checked regularly. For additional information, see "Battery" in the "8. Maintenance and do-it-yourself" section.

DRAINING OF COOLANT WATER

If the vehicle is to be left outside without antifreeze, drain the cooling system by opening the drain plug located under the radiator. Refill before operating the vehicle. See "Engine cooling system" in the "8. Maintenance and do-it-yourself" section for changing engine coolant.

TIRE EQUIPMENT

1. SUMMER tires are of a tread design to provide superior performance on dry pavement. However, the performance of these tires will be substantially reduced in snowy and icy conditions. If you operate your vehicle on snowy or icy roads, NISSAN recommends the use of MUD & SNOW or ALL SEASON tires on all four wheels. Please consult your NISSAN dealer for the tire type, size, speed rating and availability information.
2. For additional traction on icy roads, studded tires may be used. However, some provinces prohibit their use. Check local, state and provincial laws before installing studded tires.

Skid and traction capabilities of studded snow tires, on wet or dry surfaces, may be poorer than that of non-studded snow tires.

3. Tire chains may be used if desired. Make sure they are of proper size for the tires on your vehicle and are installed according to the chain manufacturer's suggestions. Use of tire chains may be prohibited according to location. Check the local laws before installing tire chains. **Use only SAE Class S chains.** Class "S" chains are used on vehicles with restricted tire to vehicle clearance. Vehicles that can use Class "S" chains are designed to meet the SAE standard minimum clearances between the tire and the closest vehicle suspension or body component required to accommodate the use of a winter traction device (tire chains or cables). The minimum clearances are determined using the factory equipped tire size. Other types may damage your vehicle. Use chain tensioners when recommended by the tire chain manufacturer to ensure a tight fit. Loose end links of the tire chain must be secured or removed to prevent the possibility of whipping action damage to the fenders or underbody. If possible, avoid fully loading your vehicle when using tire chains. In addition, drive at a reduced speed. Otherwise, your vehicle may be damaged and/or vehicle handling and performance may be adversely affected.

- **Do not use tire chains on dry roads.**

Tire chains must be installed only on the front wheels and not on the rear wheels.

Do not drive with tire chains on paved roads which are clear of snow. Driving with chains in such conditions can cause damage to the various mechanisms of the vehicle due to some overstress.

4. For all wheel drive:
   If you install snow tires, they must also be the same size, brand, construction and tread pattern on all four wheels.

SPECIAL WINTER EQUIPMENT

It is recommended that the following items be carried in the vehicle during winter:

- a scraper and stiff-bristled brush to remove ice and snow from the windows and wiper blades.
- a sturdy, flat board to be placed under the jack to give it firm support.
- a shovel to dig the vehicle out of snow-drifts.
- extra window washer fluid to refill the reservoir tank.

DRIVING ON SNOW OR ICE

WARNING

- **Wet ice (32°F, 0°C and freezing rain), very cold snow or ice can be slick and very hard to drive on. The vehicle will have a lot less traction or grip under these conditions. Try to avoid driving on wet ice until the road is salted or sanded.**

- **Whatever the condition, drive with caution. Accelerate and slow down with care. If accelerating or down-shifting too fast, the drive wheels will lose even more traction.**
- **Allow more stopping distance under these conditions. Braking should be started sooner than on dry pavement.**
- **Allow greater following distances on slippery roads.**
- **Watch for slippery spots (glare ice). These may appear on an otherwise clear road in shaded areas. If a patch of ice is seen ahead, brake before reaching it. Try not to brake while actually on the ice, and avoid any sudden steering maneuvers.**
- **Do not use cruise control on slippery roads.**
- **Snow can trap dangerous exhaust gases under your vehicle. Keep snow clear of the exhaust pipe and from around your vehicle.**

ENGINE BLOCK HEATER (if so equipped)

An engine block heater to assist extreme cold temperature starting is available through your NISSAN dealer.

WARNING

Do not use your heater with an un-grounded electrical system or two-pronged (cheater) adapters. You can be injured by an electrical shock if you use an ungrounded connection.

MEMO

6 In case of emergency

Flat tire 6-2
- Stopping the vehicle 6-2
- Preparing the tools and spare tire 6-2
- Blocking wheels 6-3
- Removing the tire 6-3
- Installing the spare tire 6-5

Jump starting 6-6
Push starting 6-8
If your vehicle overheats 6-8
Towing your vehicle 6-9
- Towing recommended by NISSAN 6-10
- Vehicle recovery (Freeing a stuck vehicle) 6-12

FLAT TIRE

If you have a flat tire, follow the instructions below.

STOPPING THE VEHICLE

1. Safely move the vehicle off the road away from traffic.
2. Turn on the hazard warning flasher lights.
3. Park on a level surface and apply the parking brake. Shift the selector lever into P (Park) position (A/T models), R (Reverse) position (M/T models).
4. Turn off the engine.
5. Raise the hood to warn other traffic, and to signal professional road assistance personnel that you need assistance.
6. Have all passengers get out of the vehicle and stand in a safe place, away from traffic and clear of the vehicle.

WARNING

- **Make sure that the parking brake is securely applied and the manual transmission is shifted into the R (Reverse) position, or the automatic transmission into the P (Park) position.**
- **Never change tires when the vehicle is on a slope, ice or slippery areas. This is hazardous.**
- **Never change tires if oncoming traffic is close to your vehicle. Wait for professional road assistance.**

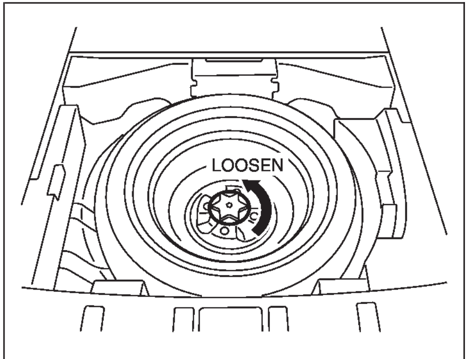

SCE0367

PREPARING THE TOOLS AND SPARE TIRE

Remove jacking tools and spare tire from storage area.

If spacers are equipped, remove them before removing the spare tire.

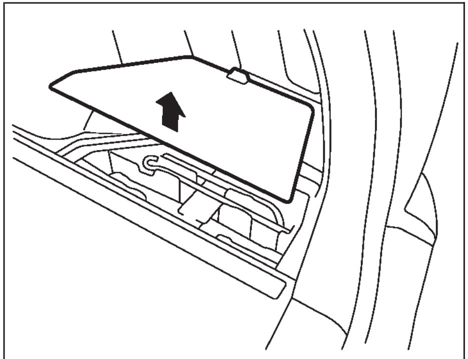

SCE0366

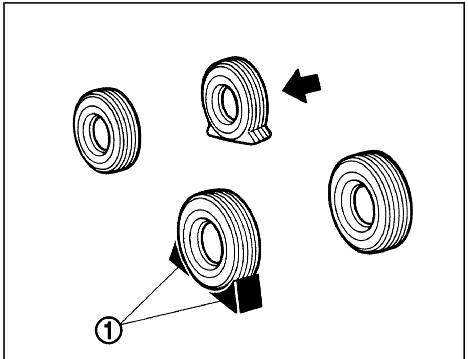

MCE0001A

BLOCKING WHEELS

Place suitable blocks ① at both the front and back of the wheel diagonally opposite the flat tire ⬅ to prevent the vehicle from moving when it is jacked up.

WARNING

Be sure to block the wheel as the vehicle may move and could cause personal injury.

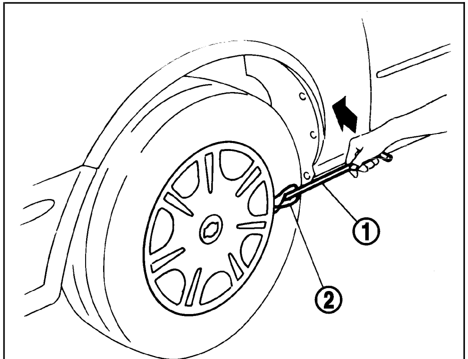

SCE0497

REMOVING THE TIRE

Removing the wheel cover

WARNING

Never use your hands to remove the wheel cover. This may cause personal injury.

To remove the wheel cover, use the jack rod ① as illustrated.

Apply cloth ② between the wheel and jack rod to prevent damaging the wheel and wheel cover.

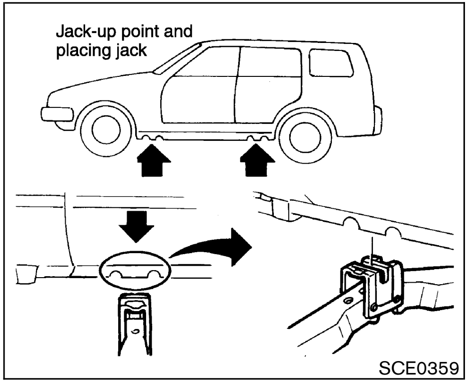

SCE0359

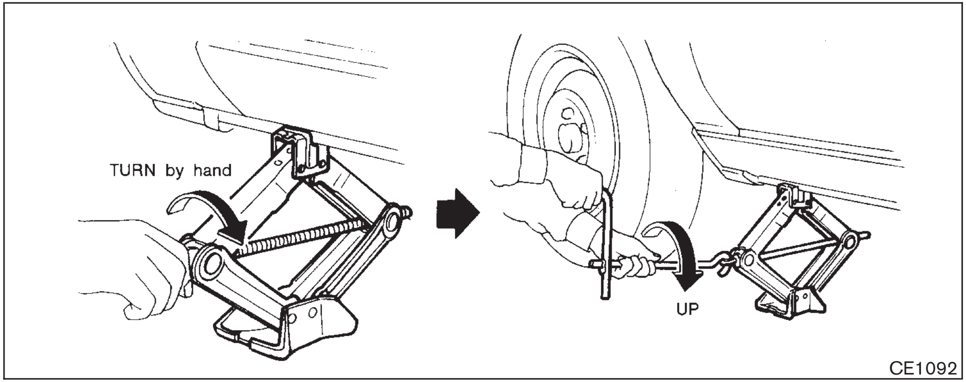

CE1092

Jacking up vehicle and removing the damaged tire

Carefully read the caution label attached to the jack body and the following instructions.

1. Place the jack directly under the jack-up point as illustrated above so that top of the jack contacts the vehicle at the jack up point. Align the jack head between the two notches in the front or the rear as shown. Also fit the groove of the jack head between the notches as shown.

The jack should be used on level firm ground.

2. Loosen each wheel nut one or two turns by turning counterclockwise with the wheel nut wrench. **Do not remove the wheel nuts until the tire is off the ground.**

3. Carefully raise the vehicle until the tire clears the ground. To lift the vehicle, securely hold the jack lever and rod with both hands as shown above. Remove the wheel nuts, and then remove the tire.

WARNING

- **Never get under the vehicle while it is supported only by the jack.**
- **Use only the jack provided with your vehicle to lift the vehicle. Do not use the jack provided with your vehicle on other vehicles.**
  The jack is designed only for lifting your vehicle during a tire change.

- **Use the correct jack up points; never use any other part of the vehicle for jack support.**
- **Never jack up the vehicle more than necessary.**
- **Never use blocks on or under the jack.**
- **Do not start or run engine while vehicle is on the jack, as it may cause the vehicle to move. This is especially true for vehicles with limited slip differential carriers.**
- **Do not allow passengers to stay in the vehicle while it is on the jack.**

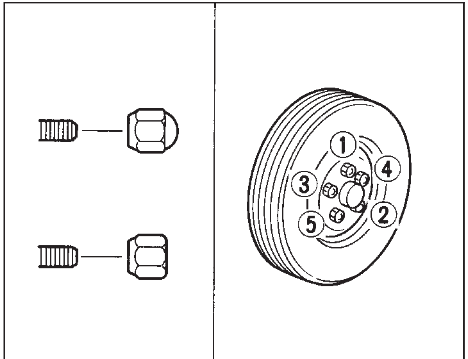

SCE0039

INSTALLING THE SPARE TIRE

The spare tire is designed for emergency use. See specific instructions under the heading "Wheels and tires" in the "8. Maintenance and do-it-yourself " section of this manual.

1. Clean any mud or dirt from the surface between the wheel and hub.
2. Carefully put the spare tire on and tighten the wheel nuts with your fingers.
3. With the wheel nut wrench, tighten wheel nuts alternately and evenly until they are tight.
4. Lower the vehicle slowly until the tire touches the ground. Then, with the wheel nut wrench, tighten the wheel nuts securely in the sequence illustrated (①, ②, ③, ④, ⑤). Lower the vehicle completely.

WARNING

- **Incorrect wheel nuts or improperly tightened wheel nuts can cause the wheel to become loose or come off. This could cause an accident.**
- **Do not use oil or grease on the wheel studs or nuts. This could cause the nuts to become loose.**

Retighten the wheel nuts when the vehicle has been driven for 1,000 km (600 miles) (also in cases of a flat tire, etc.).

As soon as possible, tighten the wheel nuts to the specified torque with a torque wrench.

Wheel nut tightening torque:

108 N·m (11 kg-m, 80 ft-lb)

The wheel nuts must be kept tightened to specification at all times. It is recom-

mended that wheel nuts be tightened to specification at each lubrication interval.

Adjust tire pressure to the COLD pressure.

COLD pressure:

After vehicle has been parked for three hours or more or driven less than 1.6 km (1 mile).

COLD tire pressures are shown on the Tire and Loading Information label affixed to the driver side center pillar.

5. Securely store the flat tire and jacking equipment in the vehicle.
6. Close the floor cover.

WARNING

- **Always make sure that the spare tire and jacking equipment are properly secured after use. Such items can become dangerous projectiles in an accident or sudden stop.**
- **The spare tire is designed for emergency use. See specific instructions under the heading "Wheels and tires" in the "8. Maintenance and do-it-yourself" section of this manual.**

JUMP STARTING

To start your engine with a booster battery, the instructions and precautions below must be followed.

WARNING

- **If done incorrectly, jump starting can lead to a battery explosion, resulting in severe injury or death. It could also damage your vehicle.**
- **Explosive hydrogen gas is always present in the vicinity of the battery. Keep all sparks and flames away from the battery.**
- **Do not allow battery fluid to come into contact with eyes, skin, cloth or painted surfaces. Battery fluid is a corrosive sulphuric acid solution which can cause severe burns. If the fluid should come into contact with anything, immediately flush the contacted area with water.**
- **Keep battery out of the reach of children.**

- **The booster battery must be rated at 12 volts. Use of an improperly rated battery can damage your vehicle.**
- **Whenever working on or near a battery, always wear suitable eye protectors (for example, goggles or industrial safety spectacles) and remove rings, metal bands, or any other jewelry. Do not lean over the battery when jump starting.**
- **Do not attempt to jump start a frozen battery. It could explode and cause serious injury.**
- **Your vehicle has an automatic engine cooling fan. It could come on at any time. Keep hands and other objects away from it.**

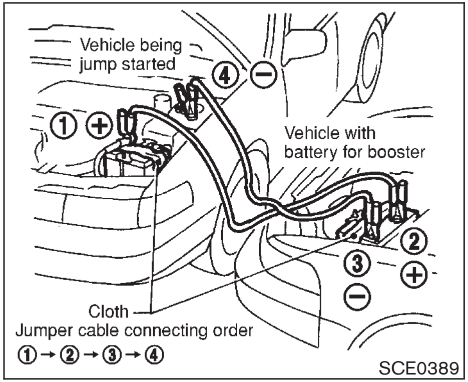

WARNING

Always follow the instructions below. Failure to do so could result in damage to the charging system and cause personal injury.

1. If the booster battery is in another vehicle, position the two vehicles to bring their batteries into close proximity to each other.

   Do not allow the two vehicles to touch.

2. Apply parking brake. Move the shift lever to the N (Neutral) position (On automatic transmission models, move the selector lever to the P (Park) position). Switch off all unnecessary electrical systems (light, heater, air conditioner, etc.).
3. Remove vent caps on the battery (if so equipped). Cover the battery with an old cloth as illustrated to reduce explosion hazard.
4. Connect jumper cables in the sequence as illustrated.

CAUTION

- **Always connect positive (+) to positive (+) and negative (–) to body ground not to the battery.**
- **Make sure that cables do not touch moving parts in the engine compartment and that clamps do not contact any other metal.**

5. Start the engine of the other vehicle and let it run for a few minutes.
6. Keep the engine speed of the other vehicle at about 2,000 rpm, and start your engine in the normal manner.

CAUTION

Do not keep starter motor engaged for more than 10 seconds. If the engine does not start right away, turn the key off and wait 3 to 4 seconds before trying again.

7. After starting your engine, carefully disconnect the negative cable and then the positive cable.
8. Replace the vent caps (if so equipped). Be sure to dispose of the cloth used to cover the vent holes as it may be contaminated with corrosive acid.

PUSH STARTING

Do not attempt to start the engine by pushing the vehicle.

CAUTION

- **Automatic transmission models cannot be push started. Attempting to do so may cause transmission damage.**
- **Three way catalyst equipped models should not be started by pushing since the three way catalyst may be damaged.**
- **Never try to start the vehicle by towing it; when the engine starts, the forward surge could cause the vehicle to collide with the tow vehicle.**

If needed, Roadside Assistance is available. Please see your Warranty Information Booklet.

IF YOUR VEHICLE OVERHEATS

WARNING

- **Do not continue to drive if your vehicle overheats. Doing so could cause a vehicle fire.**
- **To avoid the danger of being scalded, never remove the radiator cap while the engine is still hot. When the radiator cap is removed, pressurized hot water will spurt out, possibly causing serious injury.**
- **Do not open the hood if steam is coming out.**

If your vehicle is overheating (indicated by an extremely high temperature gauge reading), or if you feel a lack of engine power, detect abnormal noise, etc., take the following steps:

1. Move the vehicle safely off the road, apply the parking brake and move the shift lever to the N (Neutral) position (automatic transmission to the P (Park) position).

   Do not stop the engine.
2. Turn off the air conditioner switch. Open all the windows, move the heater or air condi-

tioner temperature control to maximum hot and fan control to high speed.

3. If engine overheating is caused by climbing a long hill on a hot day, run the engine at a fast idle (approximately 1,500 rpm) until the temperature gauge indication returns to normal.
4. Get out of the vehicle. Look and listen for steam or coolant escaping from the radiator before opening the hood. Wait until no steam or coolant can be seen before proceeding.
5. Open the engine hood.

WARNING

If steam or water is coming from the engine, stand clear to prevent getting burned.

6. Visually check if the cooling fan is running. The radiator hoses and radiator should not leak water.

   If coolant is leaking or the cooling fan does not run, stop the engine.

WARNING

- **Be careful not to allow your hands, hair, jewelry or clothing to come into contact with, or to get caught in the cooling fan, or drive belt.**
- **The engine cooling fan can start at any time when the coolant temperature is high.**

7. After the engine cools down, check the coolant level in the reservoir tank with the engine running. Add coolant to the reservoir tank if necessary. Have your vehicle repaired at the nearest NISSAN dealer.

TOWING YOUR VEHICLE

When towing your vehicle, all provincial and local regulations for towing must be followed. Incorrect towing equipment could damage your vehicle. Towing instructions are available from a NISSAN dealer. Local service operators are generally familiar with the applicable laws and procedures for towing. To assure proper towing and to prevent accidental damage to your vehicle, NISSAN recommends having a service operator tow your vehicle. It is advisable to have the service operator carefully read the following precautions.

WARNING

- **Never ride in a vehicle that is being towed.**
- **Never get under your vehicle after it has been lifted by a tow truck.**

CAUTION

- **When towing, make sure that the transmission, axles, steering system and powertrain are in working condition. If any unit is damaged, dollies**

must be used.

- Always attach safety chains before towing.

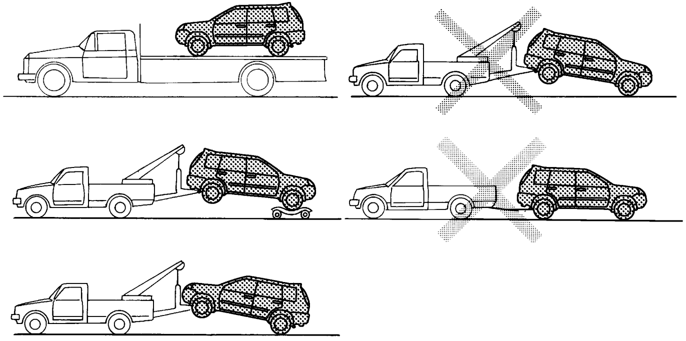

Two wheel drive models

TOWING RECOMMENDED BY NISSAN

Two wheel drive models

NISSAN recommends that your vehicle be towed with the driving (front) wheels off the ground or place the vehicle on a flat bed truck as illustrated.

CAUTION

- **Never tow automatic transaxle models with the front wheels on the ground or four wheels on the ground (forward or backward) as this may cause serious and expensive damage to the transaxle.**
  If it is necessary to tow the vehicle with the rear wheels raised, always use towing dollies under the front wheels.
- **When towing automatic transaxle models with the front wheels on towing dollies:**

- **Turn the ignition key to the OFF position, and secure the steering wheel in a straight ahead position with a rope or similar device. Never secure the steering wheel by turning the ignition key to the LOCK position. This may damage the steering lock mechanism.**
- **Move the selector lever to the N (Neutral) position.**

- **When towing two wheel drive automatic transaxle model with the rear wheels on the ground (if you do not use towing dollies): Always release the parking brake.**

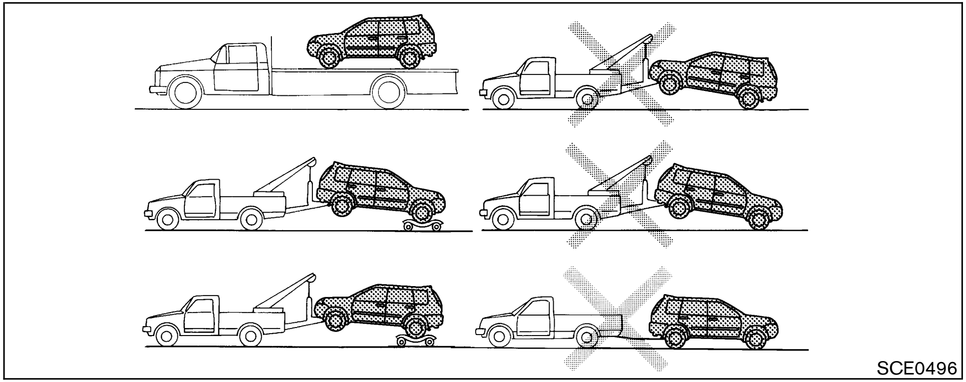

Four wheel drive models

Four wheel drive models

NISSAN recommends that towing dollies be used when towing your vehicle or the vehicle be placed on a flat bed truck as illustrated.

CAUTION

Never tow 4WD models with any of the wheels on the ground as this may cause serious and expensive damage to the drive train.

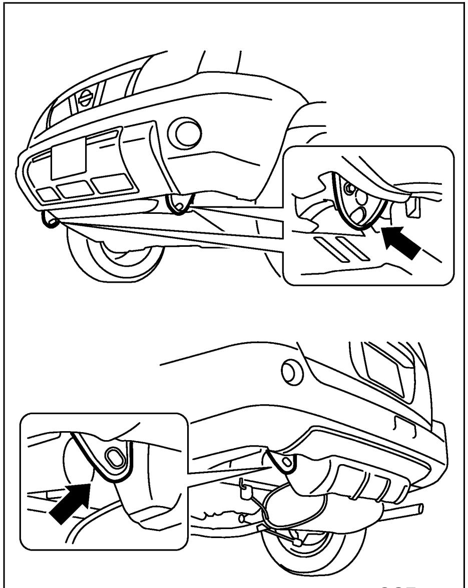

SCE0478

VEHICLE RECOVERY (Freeing a stuck vehicle)

WARNING

- **Stand clear of a stuck vehicle.**
- **Do not spin the tires at a high speed. This could cause them to explode and result in serious injury. Parts of your vehicle could also overheat and be damaged.**

CAUTION

- **Use the towing hook only, not other parts of the vehicle. Otherwise, the vehicle body will be damaged.**
- **Use the towing hook only to free a vehicle stuck in sand, snow, mud, etc. Never tow the vehicle for a long distance using only the towing hook.**
- **The towing hook is under tremendous force when used to free a stuck vehicle. Always pull the cable straight out from the front of the vehicle. Never pull on the hook at an angle.**

- Pulling devices should be routed so they do not touch any part of the suspension, steering, brake or cooling systems.
- Always pull the cable straight out from the front or rear of the vehicle. Never pull on the vehicle at an angle.
- Pulling devices such as ropes or canvas straps are not recommended for use in vehicle towing or recovery.

7 Appearance and care

Cleaning exterior 7-2
  Washing 7-2
  Removing spots 7-2
  Waxing 7-2
  Glass 7-3
  Underbody 7-3
  Aluminum alloy wheels 7-3
  Chrome parts 7-3
  Plastic parts 7-3
Cleaning interior 7-3
  Floor mats 7-4
  Glass 7-4
  Seat belts 7-4
Corrosion protection 7-5
  Most common factors contributing to vehicle corrosion 7-5
  Environmental factors influence the rate of corrosion 7-5
  To protect your vehicle from corrosion 7-5

CLEANING EXTERIOR

In order to maintain the appearance of your vehicle, it is important to take proper care of it.

In the following cases, please wash your vehicle as soon as possible to protect the paint surface.

- After a rainfall to prevent possible damage from acid rain
- After driving on coastal roads
- When contaminants such as soot, bird droppings, tree sap, metal particles or bugs get on the paint surface
- When dust or mud builds up on the surface

Whenever possible, store or park your vehicle inside a garage or in a covered area.

When it is necessary to park outside, park in a shady area or protect the vehicle with a body cover.

Be careful not to scratch the paint surface when putting on or removing the body cover.

WASHING

Thoroughly rinse surface dirt off the vehicle with a wet sponge and plenty of clean water. Clean the vehicle thoroughly using a mild soap such as NISSAN Car Wash, or a general purpose dishwashing liquid mixed with clean, lukewarm (never hot) water.

CAUTION

- **Do not use strong household soap, strong chemical detergents, gasoline or solvents.**
- **Do not wash the vehicle in direct sunlight or while the vehicle body is hot, as the surface may become water-spotted.**
- **Avoid using tight-napped or rough cloths, such as washing mitts. Care must be taken when removing caked-on dirt or other foreign substances so that the paint surface is not scratched or damaged.**

Rinse the vehicle again with plenty of clean water.

Inside flanges, seams and folds on the doors, hatches and hood are particularly vulnerable to the effects of road salt. Therefore, these areas must be regularly cleaned. Make sure that the drain holes in the lower edge of the door are open. Spray water under the body and in the wheel wells to loosen the dirt and wash away road salt.

Avoid leaving water spots on the paint surface by using a damp chamois to dry the vehicle.

REMOVING SPOTS

Remove tar and oil spots, industrial dust, insects, and tree sap as quickly as possible from the surface of the paint to avoid lasting damage or staining. Special cleaning products are available at your NISSAN dealer or any automotive accessory store.

WAXING

Regular waxing protects the paint surface and helps retain new vehicle appearance. After waxing, polishing is recommended to remove built-up residue and to avoid a weathered appearance.

If you wish to wax your vehicle, only use a wax specified for use over clear coats, such as NISSAN Liquid or Spray Wax. Your NISSAN dealer can assist you in choosing the proper product.

- Wax your vehicle only after a thorough washing. Follow the instructions supplied with the wax.
- Do not use a wax containing any abrasives, cutting compounds or cleaners that may damage the vehicle finish.

- If the surface does not polish easily, use a road tar remover and wax again.

Machine compounding or aggressive polishing on a base coat/clear coat paint finish may dull the finish or leave swirl marks.

GLASS

Use glass cleaner to remove smoke and dust film from the glass surfaces. It is normal for glass to become coated with a film after the vehicle is parked in the hot sun. Glass cleaner and a soft cloth will easily remove this film.

UNDERBODY

In areas where road salt is used in winter, the underbody must be cleaned regularly. This will prevent dirt and salt from building up and causing underbody and suspension corrosion. Before the winter period and again in the spring, the underseal must be checked and, if necessary, re-treated.

ALUMINUM ALLOY WHEELS

Wash regularly, especially during winter months in areas where road salt is used. Salt could discolor the wheel if not removed.

CHROME PARTS

Clean all chrome parts regularly with a non-abrasive chrome polish to maintain the finish.

PLASTIC PARTS

Plastic parts can be cleaned with a mild soap solution. If the dirt cannot be easily removed, use a plastic cleaner. Do not use any solvents.

CLEANING INTERIOR

Occasionally remove loose dust from the interior trim, plastic parts and seats using a vacuum cleaner or soft brush. Wipe the vinyl and leather surfaces with a clean, soft cloth dampened in mild soap solution, then wipe clean with a dry soft cloth. Before using any fabric protector, read the manufacturer's recommendations. Some fabric protectors contain chemicals that may stain or bleach the seat material.

Use a cloth dampened only with water, to clean the meter and gauge lens.

CAUTION

- **Never use gasoline, thinner, or any similar material.**
- **The leather seats should be regularly coated with a leather wax like saddle soap. Never use car wax.**
- **Never use fabric protectors unless recommended by the manufacturer.**
- **Do not use glass or plastic cleaner on meter or gauge lens covers. It may damage the lens cover.**

FLOOR MATS

The use of Genuine NISSAN floor mats can extend the life of your vehicle carpet and make it easier to clean the interior. **No matter what mats are used, be sure they are fitted for your vehicle and are properly positioned in the footwell to prevent interference with pedal operation.** Mats should be maintained with regular cleaning and replaced if they become excessively worn.

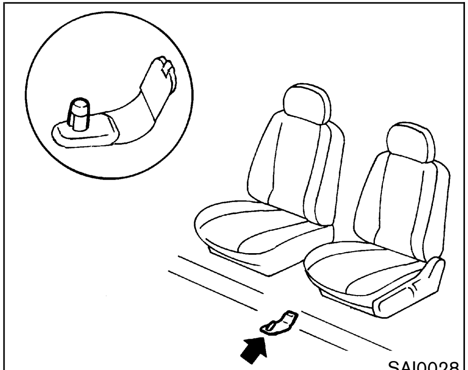

SAI0028

Floor mat positioning aid

This model includes a front floor mat bracket to act as a floor mat positioning aid. NISSAN floor mats have been specially designed for your vehicle model. The driver's side floor mat has a grommet hole incorporated in it. Simply position the mat by placing the floor mat bracket through the floor mat grommet hole while centering the mat in the floorpan contour.

Periodically check to make certain that the mats are properly positioned.

GLASS

Use glass cleaner to remove smoke and dust film from the glass surfaces. It is normal for glass to become coated with a film after the vehicle is parked in the hot sun. Glass cleaner and a soft cloth will easily remove this film.

CAUTION

When cleaning the inside of the windows, do not use sharp-edged tools, abrasive cleaners or chlorine-based disinfectant cleaners. They could damage the electrical conductors, such as radio antenna elements or rear window defroster elements.

SEAT BELTS

The seat belts can be cleaned by wiping them with a sponge dampened in a mild soap solution. Allow the belts to dry completely before using them.

WARNING

Do not allow wet belts to roll up in the retractor. NEVER use bleach, dye, or chemical solvents since these may severely weaken the seat belt webbing.

CORROSION PROTECTION

MOST COMMON FACTORS CONTRIBUTING TO VEHICLE CORROSION

- The accumulation of moisture-retaining dirt and debris in body panel sections, cavities, and other areas.
- Damage to paint and other protective coatings caused by gravel and stone chips or minor traffic accidents.

ENVIRONMENTAL FACTORS INFLUENCE THE RATE OF CORROSION

Moisture

Accumulation of sand, dirt and water on the vehicle body underside can accelerate corrosion. Wet floor coverings will not dry completely inside the vehicle, and should be removed for drying to avoid floor panel corrosion.

Relative humidity

Corrosion will be accelerated in areas of high relative humidity, especially those areas where the temperatures stay above freezing and where atmospheric pollution exists and road salt is used.

Temperature

A temperature increase will accelerate the rate of corrosion to those parts which are not well ventilated.

Air pollution

Industrial pollution, the presence of salt in the air in coastal areas, or heavy road salt use will accelerate the corrosion process. Road salt will also accelerate the disintegration of paint surfaces.

TO PROTECT YOUR VEHICLE FROM CORROSION

- Wash and wax your vehicle often to keep the vehicle clean.
- Always check for minor damage to the paint and repair it as soon as possible.
- Keep drain holes at the bottom of the doors open to avoid water accumulation.
- Check the underbody for accumulation of sand, dirt or salt. If present, wash with water as soon as possible.

CAUTION

- **NEVER remove dirt, sand or other debris from the passenger compartment by washing it out with a hose. Remove dirt with a vacuum cleaner or broom.**
- **Never allow water or other liquids to come in contact with electronic components inside the vehicle as this may damage them.**

Chemicals used for road surface de-icing are extremely corrosive. They accelerate corrosion and deterioration of underbody components such as the exhaust system, fuel and brake lines, brake cables, floor pan and fenders.

In winter, the underbody must be cleaned periodically.

For additional protection against rust and corrosion, which may be required in some areas, consult your local NISSAN dealer.

8 Maintenance and do-it-yourself

Maintenance requirements 8-2
- Scheduled maintenance 8-2
- General maintenance 8-2
- Where to go for service 8-2

General maintenance 8-2
- Explanation of general maintenance items 8-2
- Maintenance precautions 8-5

Engine compartment check locations 8-7
Engine cooling system 8-8
- Checking engine coolant level 8-8
- Changing engine coolant 8-9

Engine oil 8-10
- Checking engine oil level 8-10
- Changing engine oil 8-11
- Changing engine oil filter 8-12

Automatic transmission fluid 8-13
Power steering fluid 8-14
Brake and clutch fluid 8-14
Window washer fluid 8-15
Battery 8-15
- Jump starting 8-16

Drive belts 8-17
Spark plugs 8-17
- Replacing spark plugs 8-18

Air cleaner 8-18
Windshield wiper blades 8-19
- Cleaning 8-19
- Replacing 8-20

Rear window wiper blade 8-21
Parking brake and brake pedal 8-21
- Checking parking brake 8-21
- Checking brake pedal 8-21
- Brake booster 8-22

Fuses 8-22
- Engine compartment 8-23
- Passenger compartment 8-24

Keyfob battery replacement 8-24
Lights 8-26
- Headlights 8-27
- Headlight aim 8-28
- Exterior and interior lights 8-30

Wheels and tires 8-34
- Tire pressure 8-34
- Tire labeling 8-36
- Types of tires 8-37
- Tire chains 8-38
- Changing wheels and tires 8-39

MAINTENANCE REQUIREMENTS

Your new NISSAN has been designed to have minimum maintenance requirements with longer service intervals to save you both time and money. However, some day-to-day and regular maintenance is essential to maintain your NISSAN's good mechanical condition, as well as its emission and engine performance.

It is the owner's responsibility to make sure that scheduled maintenance, as well as general maintenance, is performed.

As the vehicle owner, you are the only one who can ensure that your vehicle receives the proper maintenance care. You are a vital link in the maintenance chain.

SCHEDULED MAINTENANCE

For your convenience, both required and optional scheduled maintenance items are described and listed in your "Service and Maintenance Guide". You must refer to that guide to ensure that necessary maintenance is performed on your NISSAN at regular intervals.

GENERAL MAINTENANCE

General maintenance includes those items which should be checked during normal day-to-day operation. They are essential for proper vehicle operation. It is your responsibility to perform these procedures regularly as prescribed.

Performing general maintenance checks require minimal mechanical skill and only a few general automotive tools.

These checks or inspections can be done by yourself, a qualified technician or, if you prefer, your NISSAN dealer.

WHERE TO GO FOR SERVICE

If maintenance service is required or your vehicle appears to malfunction, have the systems checked and tuned by a NISSAN dealer.

NISSAN technicians are well-trained specialists and are kept up to date with the latest service information through technical bulletins, service tips, and in-dealership training programs. They are completely qualified to work on NISSAN vehicles **before** they work on your vehicle, rather than after they have worked on it.

You can be confident that your NISSAN dealer's service department performs the best job to meet the maintenance requirements of your vehicle — in a reliable and economic way.

GENERAL MAINTENANCE

During the normal day-to-day operation of the vehicle, general maintenance should be performed regularly as prescribed in this section. If you detect any unusual sounds, vibrations or smell, be sure to check for the cause or have your NISSAN dealer check it promptly. In addition, you should notify your NISSAN dealer if you think that repairs are required.

When performing any checks or maintenance work, closely observe the "Maintenance precautions" later in this section.

EXPLANATION OF GENERAL MAINTENANCE ITEMS

Additional information on the following items with "*" is found later in this section.

Outside the vehicle

The maintenance items listed here should be performed from time to time, unless otherwise specified.

Doors and engine hood :

Check that all doors and the engine hood operate smoothly. Also make sure that all latches lock securely. Lubricate if necessary. Make sure that the secondary latch keeps the hood from opening when the primary latch is released.

When driving in areas using road salt or other

corrosive materials, check lubrication frequently.

Lights* :

Clean the headlights on a regular basis. Make sure that the headlights, stop lights, tail lights, turn signal lights, and other lights are all operating properly and installed securely. Also check headlight aim.

Road wheel nuts (lug nuts)* :

When checking the tires, make sure no wheel nuts are missing, and check for any loose wheel nuts. Tighten if necessary.

Tire rotation* :

Tires should be rotated every 7,500 miles (12,000 km). However, the timing for tire rotation may vary according to your driving habits and road surface conditions.

Tires* :

Check the pressure with a gauge often and always prior to long distance trips. If necessary, adjust the pressure in all tires, including the spare, to the pressure specified. Check carefully for damage, cuts or excessive wear.

Tire, wheel alignment and balance :

If the vehicle should pull to either side while driving on a straight and level road, or if you detect uneven or abnormal tire wear, there may be a need for wheel alignment.

If the steering wheel or seat vibrates at normal highway speeds, wheel balancing may be needed.

For additional information regarding tires, refer to "Tire Safety Information" (Canada).

Windshield :

Clean the windshield on a regular basis. Check the windshield at least every six months for cracks or other damage. Have a damaged windshield repaired by a qualified repair facility.

Windshield/rear wiper blades* :

Check for cracks or wear if they do not wipe properly.

Inside the vehicle

The maintenance items listed here should be checked on a regular basis, such as when performing periodic maintenance, cleaning the vehicle, etc.

Accelerator pedal :

Check the pedal for smooth operation and make sure the pedal does not catch or require uneven effort. Keep the floor mats away from the pedal.

Brake pedal and booster* :

Check the pedal for smooth operation and make sure it has the proper distance under it when depressed fully. Check the brake booster function. Be sure to keep floor mats away from the pedal.

Brakes :

Check that the brakes do not pull the vehicle to one side when applied.

Parking brake* :

Check that the lever has the proper travel and make sure that the vehicle is held securely on a fairly steep hill when only the parking brake is applied.

Seat belts :

Check that all parts of the seat belt system (for example, buckles, anchors, adjusters and retractors) operate properly and smoothly, and are installed securely. Check the belt webbing for cuts, fraying, wear or damage.

Seats :

Check seat position controls such as seat adjusters, seatback recliner, etc. to ensure they operate smoothly and that all latches lock securely in every position. Check that the head restraints move up and down smoothly and that

the locks hold securely in all latched positions.

Steering wheel :

Check for changes in the steering conditions, such as excessive free play, hard steering or strange noises.

Warning/indicator lights and buzzers/ chimes :

Make sure that all warning/indicator lights and buzzers/chimes are operating properly.

Windshield defroster :

Check that the air comes out of the defroster outlets properly and in good quantity when operating the heater or air conditioner.

Windshield wiper and washer* :

Check that the wipers and washer operate properly and that the wipers do not streak.

Under the hood and the vehicle

The maintenance items listed here should be checked periodically (for example, each time you check the engine oil or refuel).

Battery* :

Check the fluid level in each cell. It should be between the upper level and lower level lines. Vehicles operated in high temperatures or under severe conditions require frequent checks of the battery fluid level.

Brake and clutch fluid level* :

Make sure that the brake and clutch fluid level is between the MAX and MIN lines on the reservoir.

Engine coolant level* :

Check the coolant level when the engine is cold.

Engine drive belts* :

Make sure that no belt is frayed, worn, cracked or oily.

Engine oil level* :

Check the level on the dipstick after parking the vehicle on a level spot and turning off the engine.

Exhaust system :

Make sure there are no loose supports, cracks or holes. If the sound of the exhaust seems unusual or there is a smell of exhaust fumes, immediately locate the trouble and correct it. (See “Precautions when starting and driving” in the “5. Starting and driving” section for exhaust gas (carbon monoxide).)

Fluid leaks :

Check under the vehicle for fuel, oil, water or other fluid leaks after the vehicle has been parked for a while. Water dripping from the air conditioner after use is normal. If you should notice any leaks or if gasoline fumes are evident, check for the cause and have it corrected immediately.

Power steering fluid level* and lines :

Check the level in the reservoir tank with the engine off. Check the lines for proper attachment, leaks, cracks, etc.

Radiator and hoses :

Check the front of the radiator and clean off any dirt, insects, leaves, etc., that may have accumulated. Make sure the hoses have no cracks, deformation, deterioration or loose connections.

Underbody :

The underbody is frequently exposed to corrosive substances such as those used on icy roads or to control dust. It is very important to remove these substances, otherwise rust will form on the floor pan, frame, fuel lines and around the exhaust system. At the end of winter, the underbody should be thoroughly flushed with plain water, being careful to clean those areas where mud and dirt may accumulate. For additional information, see “Cleaning exterior” in the “7. Appearance and care” section.

Windshield washer fluid* :

Check that there is adequate fluid in the tank.

MAINTENANCE PRECAUTIONS

When performing any inspection or maintenance work on your vehicle, always take care to prevent serious accidental injury to yourself or damage to the vehicle. The following are general precautions which should be closely observed.

WARNING

- **Park the vehicle on a level surface, apply the parking brake securely and block the wheels to prevent the vehicle from moving. For a manual transmission, move the shift lever to the N (Neutral) position. For an automatic transmission, move the selector lever to the P (Park) position.**
- **Be sure the ignition key is OFF or LOCK when performing any parts replacement or repairs.**
- **Your vehicle is equipped with an automatic engine cooling fan. It may come on at any time without warning, even if the ignition key is in the OFF position and the engine is not running. To avoid injury, always disconnect the negative battery cable before working near the fan.**
- **If you must work with the engine running, keep your hands, clothing, hair and tools away from moving fans, belts and any other moving parts.**
- **It is advisable to secure or remove any loose clothing and any jewelry, such as rings, watches, etc. before working on your vehicle.**
- **Always wear eye protection whenever you work on your vehicle.**
- **If you must run the engine in an enclosed space such as a garage, be sure there is proper ventilation for exhaust gases to escape.**
- **Never get under the vehicle while it is supported only by a jack. If it is necessary to work under the vehicle, support it with safety stands.**
- **Keep smoking materials, flame and sparks away from fuel and the battery.**
- **On gasoline engine models with the Multiport Fuel Injection (MFI) System, the fuel filter or fuel lines should be serviced by a NISSAN dealer because the fuel lines are under high pressure even when the engine is off.**

CAUTION

- **Do not work under the hood while the engine is hot. Turn off the engine and wait until it cools down.**
- **Never connect or disconnect either the battery or any transistorized component connector while the ignition key is on.**
- **Never leave any engine or automatic transmission related component harness connectors disconnected while the ignition key is on.**
- **Avoid direct contact with used engine oil and coolant. Improperly disposed engine oil, engine coolant and/or other vehicle fluids can hurt the envi-**

ronment. Always conform to local regulations for disposal of vehicle fluid.

This “8. Maintenance and do-it-yourself” section gives instructions regarding only those items which are relatively easy for an owner to perform.

A genuine NISSAN Service Manual is also available. See “Owner’s Manual/Service Manual order information” in the “9. Technical and consumer information” section.

You should be aware that incomplete or improper servicing may result in operating difficulties or excessive emissions, and could affect your warranty coverage. **If in doubt about any servicing, have it done by your NISSAN dealer.**

ENGINE COMPARTMENT CHECK LOCATIONS

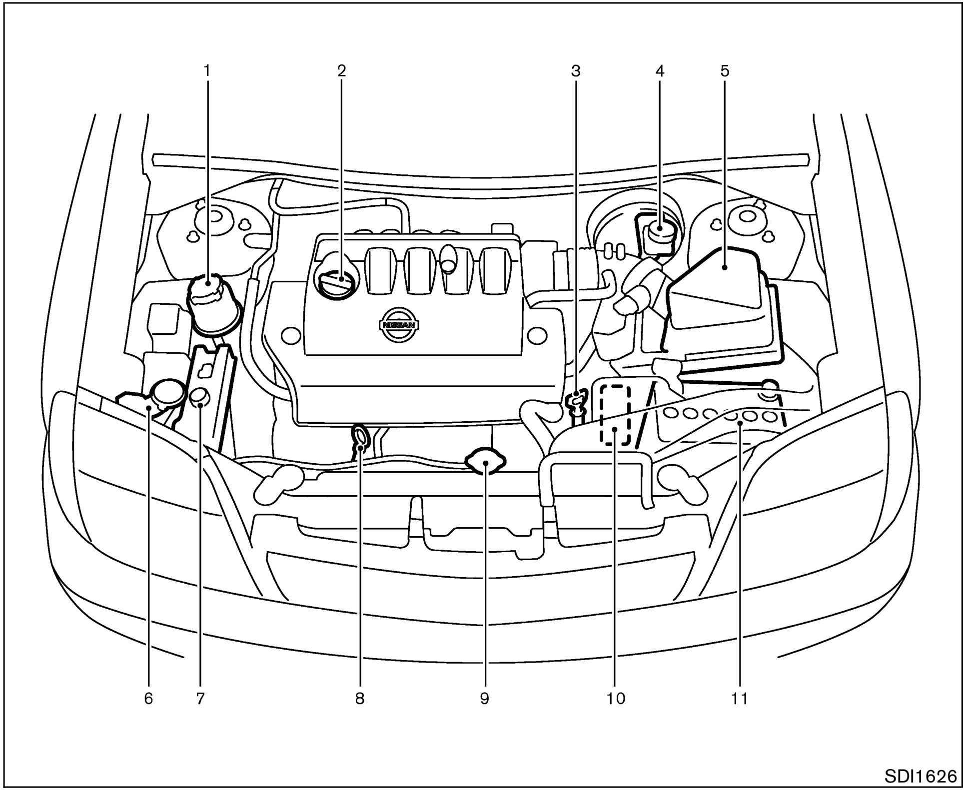

1. Power steering fluid reservoir
2. Engine oil filler cap
3. Automatic transmission fluid dipstick (A/T model)
4. Brake and clutch (M/T) fluid reservoir
5. Air cleaner
6. Window washer fluid reservoir
7. Engine coolant reservoir
8. Engine oil dipstick
9. Radiator cap
10. Fuse/Fusible link holder
11. Battery

ENGINE COOLING SYSTEM

The engine cooling system is filled at the factory with a high-quality, year-round, antifreeze coolant solution. The antifreeze solution contains rust and corrosion inhibitors, therefore additional cooling system additives are not necessary.

CAUTION

When adding or replacing coolant, be sure to use only a Genuine NISSAN Long Life Antifreeze Coolant or equivalent with the proper mixture ratio of 50% antifreeze and 50% demineralized water/distilled water. The use of other types of coolant solutions may damage your engine cooling system.

Outside temperature down to		Anti-freeze	Demineralized water/ distilled water
°C	°F		
−35	−30	50%	50%

WARNING

- **Never remove the radiator cap when the engine is hot. Serious burns could be caused by high pressure fluid escaping from the radiator. Wait until the engine and radiator cool down.**
- **See "If your vehicle overheats" in the "6. In case of emergency" section.**
- **The radiator is equipped with a pressure cap. To prevent engine damage, use only a genuine NISSAN radiator cap.**

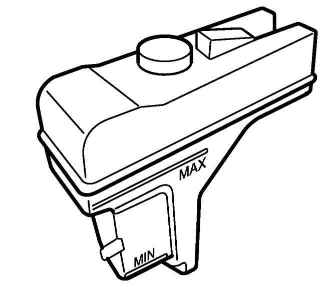

SDI1627

CHECKING ENGINE COOLANT LEVEL

Check the coolant level in the reservoir tank **when the engine is cold**. If the coolant level is below MIN, add coolant up to the MAX level. If the reservoir tank is empty, check the coolant level in the radiator **when the engine is cold.** If there is insufficient coolant in the radiator, fill the radiator with Genuine NISSAN Long Life Antifreeze/Coolant or equivalent up to the filler opening and also add it to the reservoir tank up to the MAX level.

If the engine cooling system frequently

requires coolant, have it checked by your NISSAN dealer.

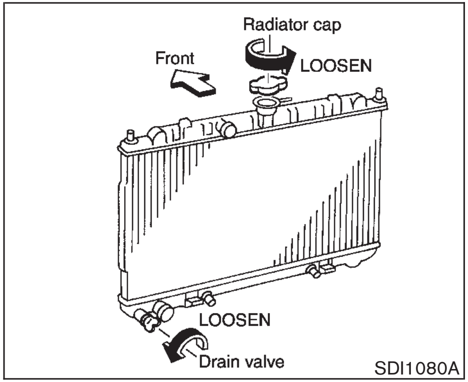

CHANGING ENGINE COOLANT

- Major cooling system repairs should be performed by your NISSAN dealer. The service procedures can be found in the appropriate NISSAN Service Manual.
- Improper servicing can result in reduced heater performance and engine overheating.

WARNING

- **To avoid being scalded, never change the coolant when the engine is hot.**
- **Never remove the radiator cap when the engine is hot. Serious burns could be caused by high pressure fluid escaping from the radiator.**
- **Avoid direct skin contact with used coolant. If skin contact is made, wash thoroughly with soap or hand cleaner as soon as possible.**
- **Keep coolant out of reach of children and pets.**

1. Open radiator drain valve at the bottom of radiator, and remove radiator filler cap.

- **Be careful not to allow coolant to contact drive belts.**
- **Waste coolant must be disposed of properly. Check your local regulations.**

2. Close the radiator drain valve securely after the coolant is drained.
3. Fill the radiator slowly with the proper mixture of antifreeze solution and demineralized water/distilled water. Fill the reservoir tank up to the MAX level. Then install the radiator filler cap.

4. Start the engine and warm it up until it reaches normal operating temperature. Then race the engine 2 or 3 times under no load. Watch the engine coolant temperature gauge for signs of overheating.
5. Stop the engine. After it completely cools down, refill the radiator up to the filler opening. Fill the reservoir tank up to the MAX level. Check the drain valve for any sign of leakage.
6. Recheck the coolant level after the vehicle has been driven for a day.

ENGINE OIL

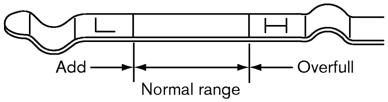

SDI1628

CHECKING ENGINE OIL LEVEL

1. Park the vehicle on a level surface and apply parking brake.
2. Run the engine until it reaches operating temperature.
3. Turn off the engine. **Wait more than 10 minutes for the oil to drain back into the oil pan.**
4. Remove the dipstick and wipe it clean. Reinsert it all the way.
5. Remove the dipstick again and check the oil level. It should be between the H and L marks. If the oil level is below the L mark, remove the oil filler cap and pour recommended oil through the opening. **Do not overfill.**
6. Recheck oil level with dipstick.

It is normal to add some oil between oil maintenance intervals or during the break-in period, depending on the severity of operating conditions.

CAUTION

Oil level should be checked regularly. Operating with insufficient amount of oil can damage the engine, and such damage is not covered by warranty.

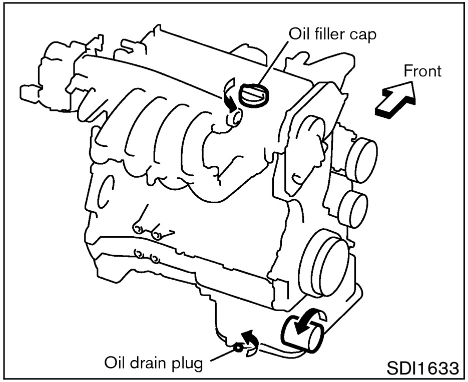

CHANGING ENGINE OIL

1. Park the vehicle on a level surface and apply the parking brake.
2. Run the engine until it reaches operating temperature.
3. Turn the engine off and **wait more than 10 minutes**.
4. Place a large drain pan under the drain plug.
5. Remove the oil filler cap.
6. Remove the drain plug with a wrench and completely drain the oil.

   If oil filter is to be changed, remove and replace it at this time. See later in this section for changing engine oil filter.

WARNING

Be careful not to burn yourself, as the engine oil is hot.

- **Waste oil must be disposed of properly.**
- **Check your local regulations.**

7. Clean and re-install the drain plug with a new washer. Securely tighten the drain plug with a wrench.

   Drain plug tightening torque:

   29 to 39 N·m (3.0 to 4.0 kg-m, 22 to 29 ft-lb)

   Do not use excessive force.
8. Refill engine with recommended oil and install the cap securely.

CAUTION

Never pull out the oil level gauge while filling engine oil.

See "Capacities and recommended fuel/lubricants" in the "9. Technical and consumer information" section for drain and refill capacity. The drain and refill capacity depends on the oil temperature and drain time. Use these specifications for reference only. Always use the dipstick to determine the proper amount of oil in the engine.

9. Start the engine.

   Check for leakage around the drain plug. Correct as required.
10. Turn the engine off and **wait more than 10 minutes**. Check the oil level with the dipstick. Add engine oil if necessary.
11. Dispose of waste oil properly.

WARNING

- **Prolonged and repeated contact with**

used engine oil may cause skin cancer.

- **Try to avoid direct skin contact with used oil. If skin contact is made, wash thoroughly with soap or hand cleaner as soon as possible.**
- **Keep used engine oil out of reach of children.**

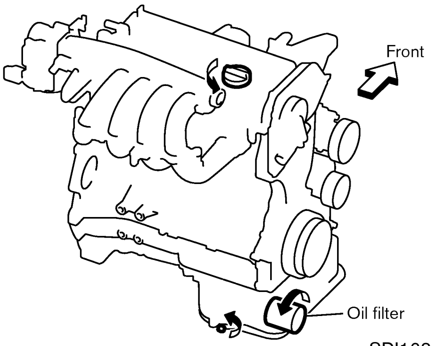

SDI1634

CHANGING ENGINE OIL FILTER

1. Park the vehicle on a level surface and apply the parking brake.
2. Turn the engine off.
3. Loosen the oil filter with an oil filter wrench. Remove the oil filter by turning it by hand.

WARNING

Be careful not to burn yourself, as the engine oil may be hot.

4. Wipe the engine oil filter mounting surface with a clean rag.

   Be sure to remove any old rubber gasket remaining on the mounting surface of the engine.
5. Coat the rubber gasket on the new filter with clean engine oil.
6. Screw in the oil filter until a slight resistance is felt, then tighten additionally more than 2/3 turn.

   Oil filter tightening torque:

   15 to 20 N·m (1.6 to 2.0 kg-m, 11 to 15 ft-lb)
7. Start the engine and check for leakage around the oil filter. Correct as required.
8. Turn the engine off and wait several minutes. Check the oil level. Add engine oil if necessary.

AUTOMATIC TRANSMISSION FLUID

WARNING

- **When engine is running, keep hands and clothing away from any moving parts such as fan drive belt.**
- **Automatic transmission fluid is poisonous and should be stored carefully in marked containers out of the reach of children.**

The fluid level should be checked using the HOT range on the dipstick at fluid temperatures between 50 and 80°C (122 and 176°F) after the vehicle has been driven approximately 5 minutes in urban areas after the engine is warmed up. The level can be checked at fluid temperatures between 30 and 50°C (86 and 122°F) using the COLD range on the dipstick for reference, after the engine is warmed up but before driving. However, the fluid level must be rechecked using the HOT range.

1. Park the vehicle on a level surface and set the parking brake.
2. Start the engine and then move the selector lever through each gear range, ending in P.
3. Check the fluid level with the engine idling.

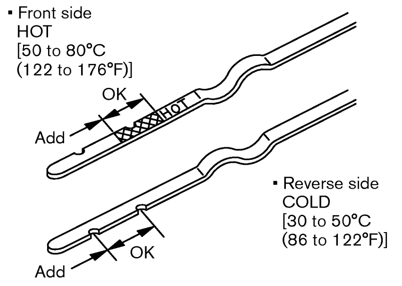

SDI1583

If the vehicle has been driven for a long time at high speeds, or in city traffic in hot weather, or if it is being used to pull a trailer, the fluid level cannot be read accurately. You should wait until the fluid has cooled down (about 30 minutes).

4. Remove the dipstick and wipe it clean with lint-free paper.
5. Re-insert the dipstick into the charging pipe as far as it will go.
6. Remove the dipstick and note the reading.

If the level is on the low side of either range, add fluid to the charging pipe.

Do not overfill.

CAUTION

Use CANADA NISSAN Automatic Transmission Fluid (ATF) or equivalent. (For more information regarding suitable fluids, contact a NISSAN dealer for correct brands of DEXRON™III/MERCON™ Automatic Transmission Fluid.)

POWER STEERING FLUID

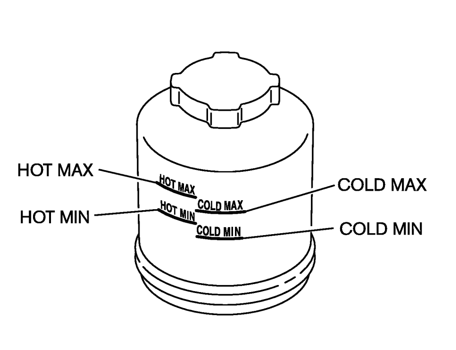

SDI1443

Check the fluid level in the reservoir tank.

The fluid level should be checked using the HOT range at fluid temperatures of 50 to 80°C (122 to 176°F) or using the COLD range at fluid temperatures of 0 to 30°C (32 to 86°F).

CAUTION

- **Do not overfill.**
- **Use NISSAN Automatic Transmission Fluid (ATF), DEXRON™III/MERCON™ or equivalent ATF.**

BRAKE AND CLUTCH FLUID

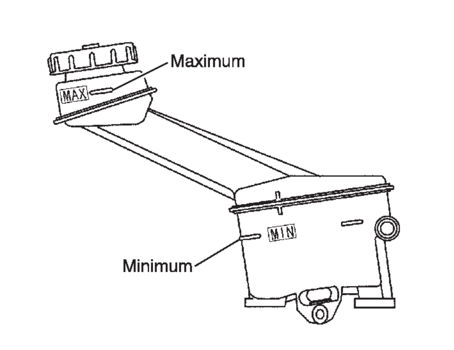

SDI1307

Check the fluid level in the reservoir. If the fluid is below the MIN line or the brake warning light comes on (for the brake fluid), add Genuine NISSAN Super Heavy Duty Brake Fluid or equivalent **DOT 3** (CMVSS No. 116) fluid up to the MAX line. If fluid must be added frequently, the system should be thoroughly checked by your NISSAN dealer.

WARNING

Use only new fluid. Old, inferior, or contaminated fluid may damage the brake system. The use of improper fluids can damage the brake system and affect the vehicle's stopping ability.

CAUTION

Do not spill the fluid on painted surfaces. This will damage the paint. If fluid is spilled, wash with water.

WINDOW WASHER FLUID

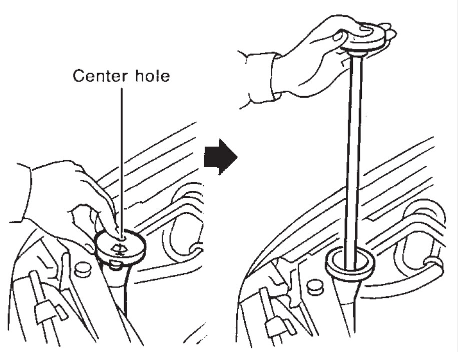

SDI0603

To check the fluid level, use your finger to plug the center hole of the cap/tube assembly (as shown above), then remove it from the tank. If there is no fluid in the tube, add fluid. Add a washer solvent to the water for better cleaning. In the winter season, add a windshield washer antifreeze. Follow the manufacturer's instructions for the mixture ratio.

WARNING

Antifreeze is poisonous and should be stored carefully in marked containers out of the reach of children.

CAUTION

Do not substitute engine antifreeze coolant for window washer solution. This may result in damage to the paint.

BATTERY

- Keep the battery surface clean and dry. Any corrosion should be washed off with a solution of baking soda and water.
- Make certain the terminal connections are clean and securely tightened.
- If the vehicle is not to be used for 30 days or longer, disconnect the (—) negative battery terminal cable to prevent discharging it.

WARNING

- **Do not expose the battery to flames or electrical sparks. Hydrogen gas generated by battery action is explosive. Do not allow battery fluid to contact your skin, eyes, fabrics, or painted surfaces. After touching a battery or battery cap, do not touch or rub your eyes. Thoroughly wash your hands. If the acid contacts your eyes, skin or clothing, immediately flush with water for at least 15 minutes and seek medical attention.**
- **Battery posts, terminals and related accessories contain lead and lead**

compounds. Wash hands after handling.

- **Do not operate the vehicle if the fluid in the battery is low. Low battery fluid can cause a higher load on the battery which can generate heat, reduce battery life, and in some cases lead to an explosion.**
- **When working on or near a battery, always wear suitable eye protection and remove all jewelry.**
- **Keep the battery out of the reach of children.**

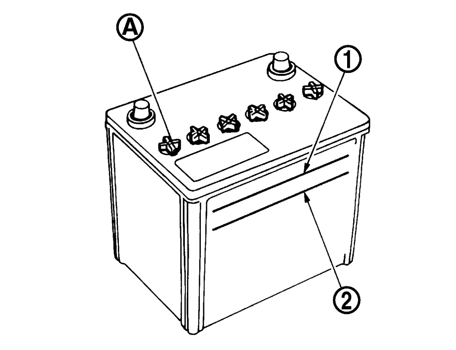

DI0137MA

Check the fluid level in each cell. It should be between the UPPER LEVEL ① and LOWER LEVEL ② lines.

If the side of the battery is not visible, the electrolyte level can be checked through each filler opening as illustrated.

If it is necessary to add fluid, add only distilled water to bring the level to the indicator in each filler opening. **Do not overfill.**

Vehicles operated in high temperatures or under severe conditions require frequent checks of the battery fluid level.

1. Remove the cell plugs Ⓐ.

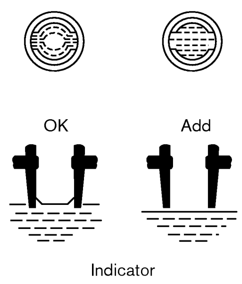

SDI1480

2. Add distilled water up to the UPPER LEVEL ①.
3. Tighten cell plugs Ⓐ.

JUMP STARTING

If jump starting is necessary, see “Jump starting” in the “6. In case of emergency” section. If the engine does not start by jump starting, the battery may have to be replaced. Contact your NISSAN dealer.

DRIVE BELTS

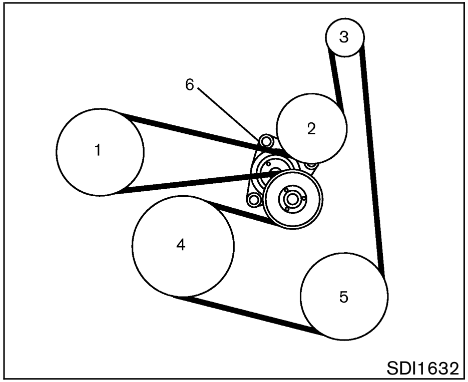

1. Power steering fluid pump
2. Water pump
3. Alternator
4. Crankshaft pulley
5. Air conditioner compressor
6. Drive belt auto-tensioner

WARNING

Be sure the ignition key is in the OFF or LOCK position. The engine could rotate unexpectedly.

1. Visually inspect each belt for signs of unusual wear, cuts, fraying, oil adhesion or looseness. If the belt is in poor condition or loose, have it replaced or adjusted by your NISSAN dealer.
2. Have the belts checked regularly for condition and tension.

SPARK PLUGS

WARNING

Be sure the engine and ignition switch are off and that the parking brake is engaged securely.

CAUTION

Be sure to use the correct socket to remove the spark plugs. An incorrect socket can damage the spark plugs.

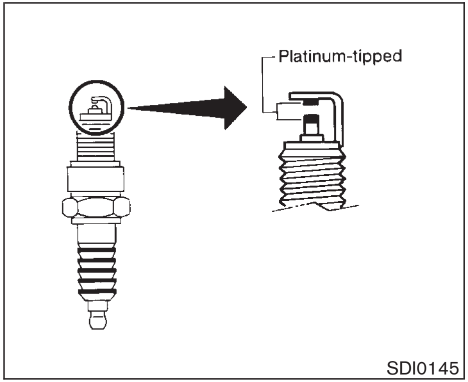

SDI0145

REPLACING SPARK PLUGS

If replacement is required, see your NISSAN dealer for servicing.

Platinum-tipped spark plugs

It is not necessary to replace the platinum-tipped spark plugs as frequently as the conventional type spark plugs since they will last much longer. Follow the maintenance schedule, but do not reuse them by cleaning or regapping.

Always replace with recommended platinum-tipped spark plugs.

AIR CLEANER

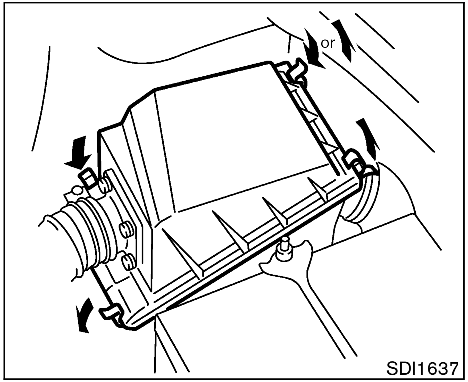

SDI1637

The filter element should not be cleaned and reused. Replace it according to the maintenance log shown in the separate Service and Maintenance Guide. When replacing the filter, wipe the inside of the air cleaner housing and the cover with a damp cloth.

WARNING

- **Operating the engine with the air cleaner removed can cause you or others to be burned. The air cleaner not only cleans the air, it stops flame if the engine backfires. If it is not there, and the engine backfires, you could be burned. Do not drive with the air cleaner removed and be careful when working on the engine with the air cleaner removed.**
- **Never pour fuel into the throttle body or attempt to start the engine with the air cleaner removed. Doing so could result in serious injury.**

WINDSHIELD WIPER BLADES

CAUTION

- **After wiper blade replacement, return the wiper arm to its original position.**

  Otherwise it may be damaged when the engine hood is opened.
- **Make sure the wiper blade contacts the glass, otherwise the arm may be damaged from wind pressure.**
- **Worn windshield wiper blades can damage the windshield and impair driver vision.**

CLEANING

If your windshield is not clear after using the windshield washer or if a wiper blade chatters when running, wax or other material may be on the blade or windshield.

Clean the outside of the windshield with a washer solution or a mild detergent. Your windshield is clean if beads do not form when rinsing with clear water.

Clean the blade by wiping it with a cloth soaked in a washer solution or a mild detergent. Then rinse the blade with clear water. If your windshield is still not clear after cleaning the blades and using the wiper, replace the blades.

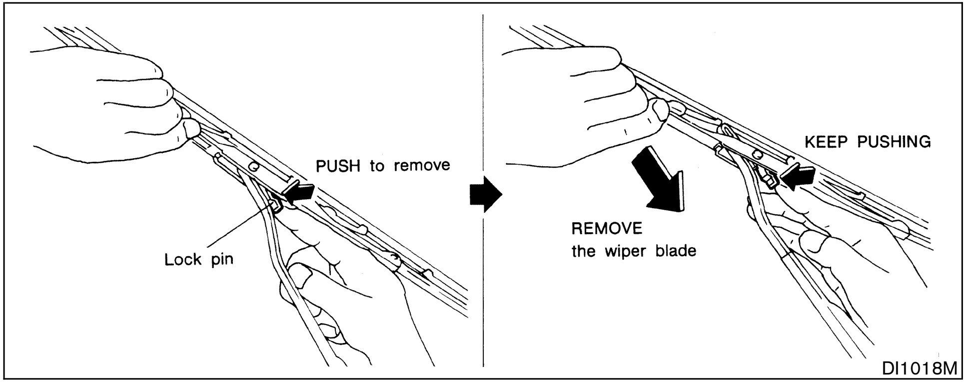

DI1018M

REPLACING

Replace the wiper blades if they are worn.

1. Pull the wiper arm.
2. Push the lock pin, then remove the wiper blade.
3. Insert the new wiper blade to the wiper arm until a click sounds.

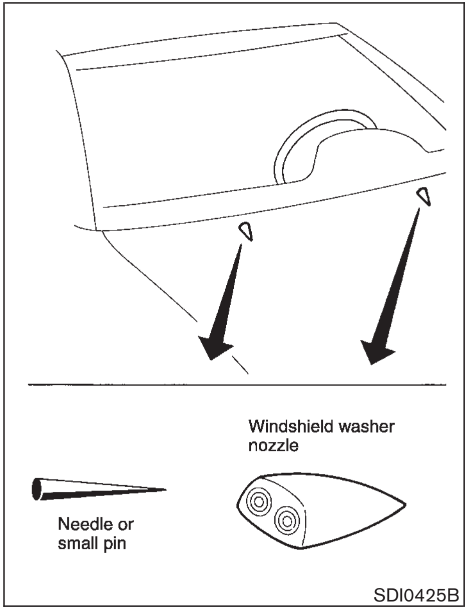

SDI0425B

If you wax the surface of the hood, be careful not to let wax get into the washer nozzle. This may cause clogging or improper windshield washer operation. If wax gets into the nozzle, remove it with a needle or small pin.

REAR WINDOW WIPER BLADE

Contact your NISSAN dealer if checking or replacement is required.

PARKING BRAKE AND BRAKE PEDAL

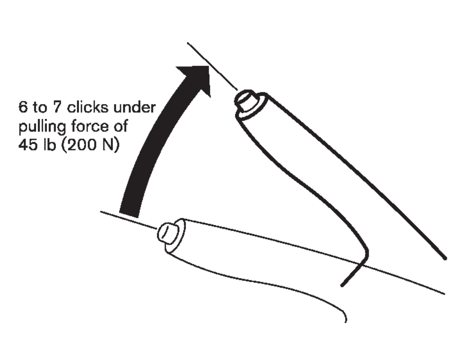

SDI1447

CHECKING PARKING BRAKE

From the released position, pull the parking brake lever up slowly and firmly. If the number of clicks is out of the range shown above, see your NISSAN dealer.

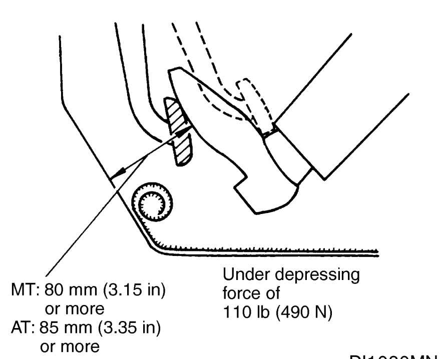

DI1020MN

CHECKING BRAKE PEDAL

With the engine running, check the distance between the upper surface of the pedal and the metal floor. If it is out of the range shown above, see your NISSAN dealer.

Self-adjusting brakes

Your vehicle is equipped with self-adjusting brakes.

The disc-type brakes self-adjust every time the brake pedal is applied.

WARNING

See your NISSAN dealer and have it checked if the brake pedal height does not return to normal.

Brake pad wear indicators

The disc brake pads on your vehicle have audible wear indicators. When a brake pad requires replacement, it will make a high pitched scraping or screeching sound when the vehicle is in motion whether or not the brake pedal is depressed. Have the brakes checked as soon as possible if the wear indicator sound is heard.

Under some driving or climate conditions, occasional brake squeak, squeal or other noise may be heard. Occasional brake noise during light to moderate stops is normal and does not affect the function or performance of the brake system.

Proper brake inspection intervals should be followed. For additional information, see the separate Service and Maintenance Guide.

BRAKE BOOSTER

Check the brake booster function as follows:

1. With the engine off, press and release the brake pedal several times. When brake pedal movement (distance of travel) remains the same from one pedal application to the next, continue on to the next step.

2. While depressing the brake pedal, start the engine. The pedal height should drop a little.

3. With the brake pedal depressed, stop the engine. Keeping the pedal depressed for about 30 seconds, the pedal height should not change.

4. Run the engine for one minute without depressing the brake pedal, then turn it off. Depress the brake pedal several times. The pedal travel distance will decrease gradually with each depression as the vacuum is released from the booster.

If the brakes do not operate properly, see your NISSAN dealer.

FUSES

CAUTION

Never use a fuse of higher or lower amperage rating than that specified on the fuse box cover. This could damage the electrical system or cause a fire.

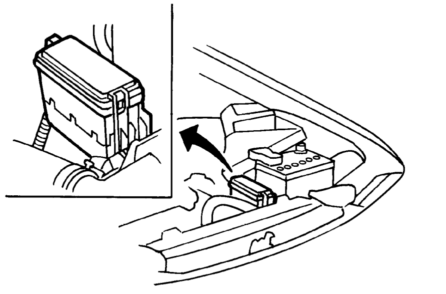

SDI1523

ENGINE COMPARTMENT

If any electrical equipment does not operate, check for an open fuse.

1. Be sure the ignition key and headlight switch are OFF.
2. Open the engine hood.
3. Remove the fusible link cover.
4. Remove the fuse with the fuse puller.
5. If the fuse is open, replace it with a new fuse.
6. If a new fuse also opens, have the electrical system checked and repaired by your NISSAN dealer.

Fusible links

If any electrical equipment does not operate and fuses are in good condition, check the fusible links. If any of these fusible links are melted, replace only with genuine NISSAN parts.

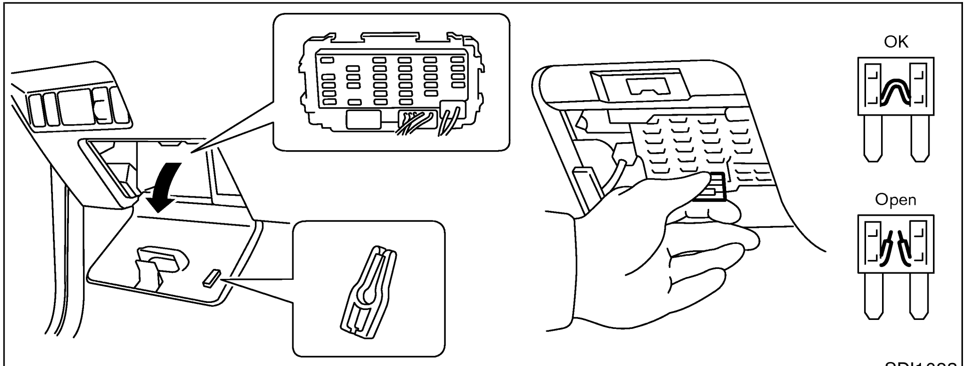

SDI1638

PASSENGER COMPARTMENT

If any electrical equipment does not operate, check for an open fuse.

1. Be sure the ignition key and the headlight switch are OFF.
2. Pull to open the fuse box lid.
3. Pinch the fuse straight with the fuse puller and pull it out.
4. If the fuse is open, replace it with a new fuse.
5. If a new fuse also opens, have the electrical system checked and repaired by your NISSAN dealer.

KEYFOB BATTERY REPLACEMENT

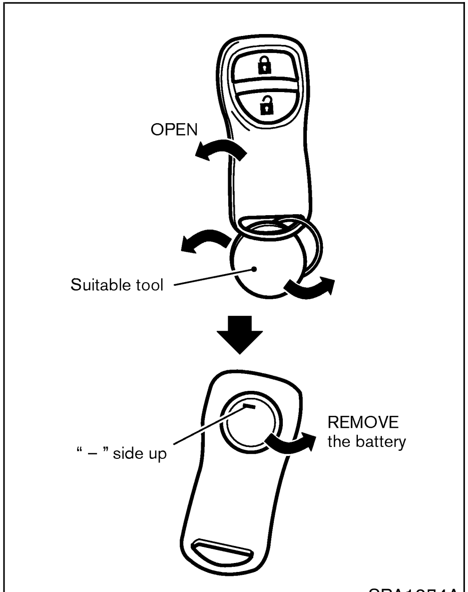

SPA1374A

Replace the battery as follows:

1. Open the lid using a suitable tool.
2. Replace the battery with a new one.
   Recommended battery: CR2025 or equivalent

Make sure that the ⊕ side faces the bottom case.

3. Close the lid securely.
4. Push the keyfob button two or three times to check its operation.

See your NISSAN dealer if you need any assistance for replacement.

If the battery is removed for any reason other than replacement, perform step 4 above.

- **Be careful not to touch a circuit board and a battery terminal.**
- **An improperly disposed battery can harm the environment. Always confirm local regulations for battery disposal.**
- **The keyfob is water-resistant; however, if it does get wet, immediately wipe completely dry.**
- **When changing batteries, do not let dust or oil get on the keyfob.**

FCC Notice:

Changes or modifications not expressly approved by the manufacturer compliance could void the user's authority to operate the equipment. This device complies with RSS-210 of Industry Canada and Part 15 of the FCC Rules. Operation is subject to the following two conditions: (1) This device may not cause harmful interference, and (2) this device must accept any interference received, including interference that may cause undesired operation of the device.

LIGHTS

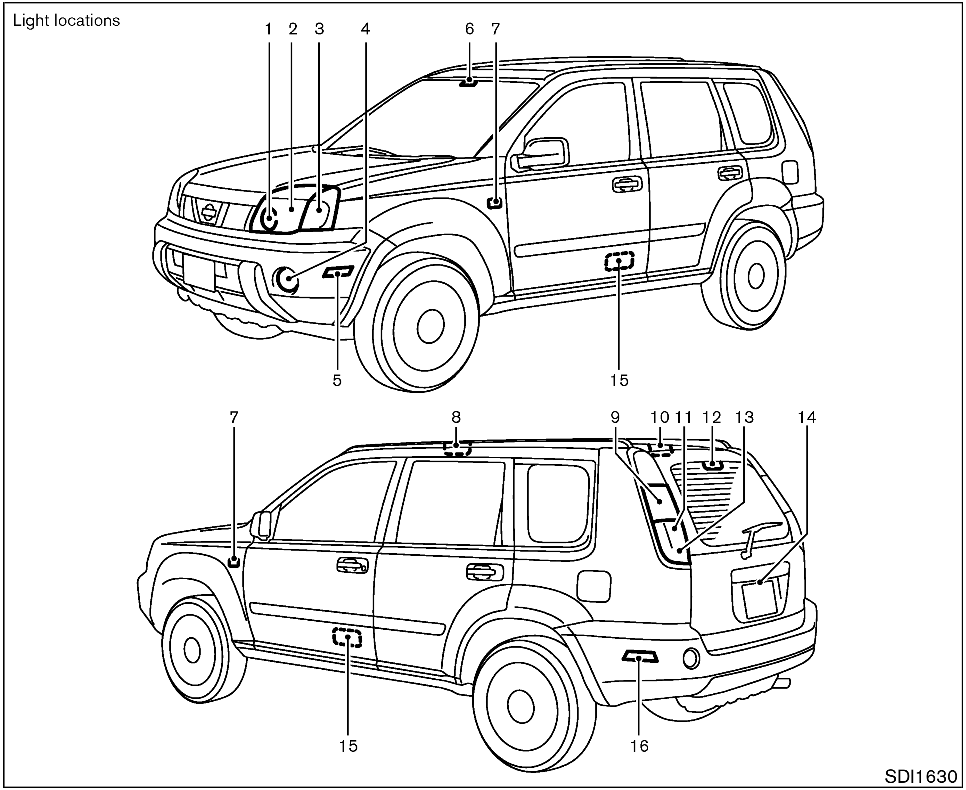

1. Front turn signal light
2. Headlight/Daytime running light
3. Front park light
4. Front fog light (if so equipped)
5. Front side marker light
6. Map light/Room light
7. Side turn signal light
8. Room light
9. Stop/tail light
10.Luggage room light
11.Rear turn signal light
12.High-mounted stop light
13.Back-up light
14.License plate light
15.Step light
16.Rear side marker light

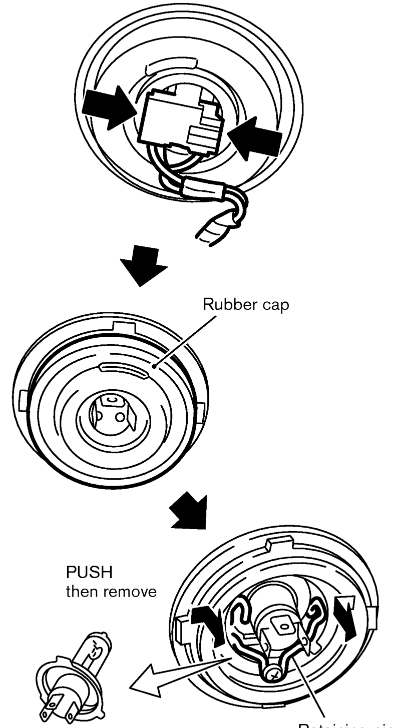

HEADLIGHTS

Replacing

The headlight is a semi-sealed beam type which uses a replaceable headlight (halogen) bulb. If replacement is required, see your NISSAN dealer.

CAUTION

- **High pressure halogen gas is sealed inside the halogen bulb. The bulb may break if the glass envelope is scratched or the bulb is dropped.**
- **When handling the bulb, do not touch the glass envelope.**
- **Do not touch the bulb.**
- **Use the same number and wattage as originally installed:**
  Bulb no. (Wattage)
  H4 (60/55W) - Halogen low/high-beam
- **Do not leave the bulb out of the headlight reflector for a long period of time as dust, moisture, and smoke may enter the headlight body and affect the performance of the head light.**

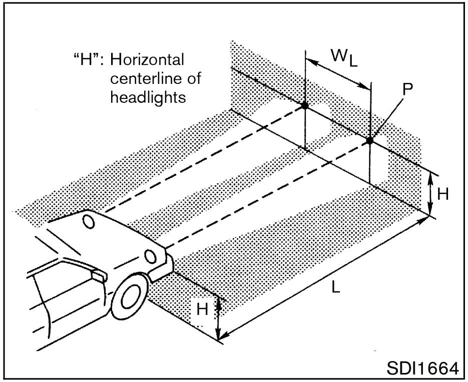

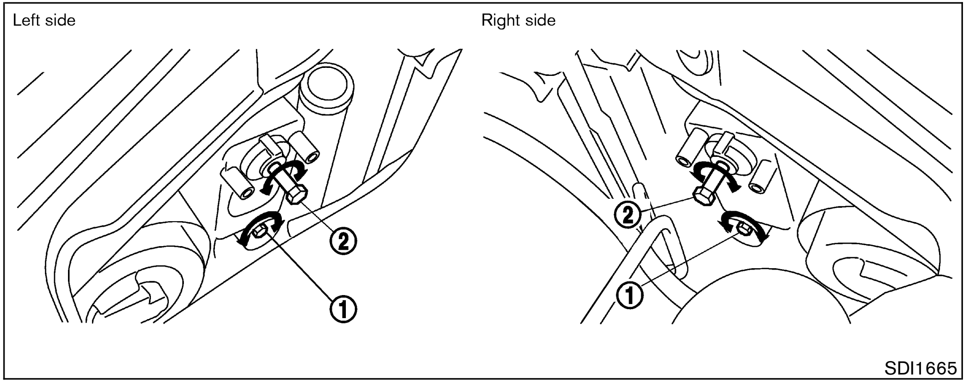

HEADLIGHT AIM

The aim of the headlights may require adjustment when replacing the headlight assembly or when the vehicle's front body has been repaired. When the adjustment is required, follow these procedures, or have them adjusted by a NISSAN dealer.

Before performing the headlights aim adjustment:

- Check the pressure of all tires for the correct inflation pressure.
- Check that the tools and spare tire are stowed securely.
- Check that the fuel and lubricants levels are filled to correct capacities.
- Unload all luggage and other items, which may influence the vehicle's height level.
- Load a weight on the driver's seat that is equivalent to the weight of a driver.

Stopping the vehicle

1. Park the vehicle on a level surface vertical to the wall or screen to which the headlights will be projected.
2. Move the vehicle close to the wall to determine the point P as shown in the illustration.

   The point P must be:
   "H" is the distance between the headlight's center point to the level surface.
   "W_L" is the distance between the left and right headlights' centers.
3. Mark point P on the wall or screen.
4. Back up the vehicle 5,000 mm (197.0 in, 16.4 ft) straight away from the wall or screen.

   "L" is the distance between the wall or screen to the vehicle's front bumper.
5. Apply the parking brake.

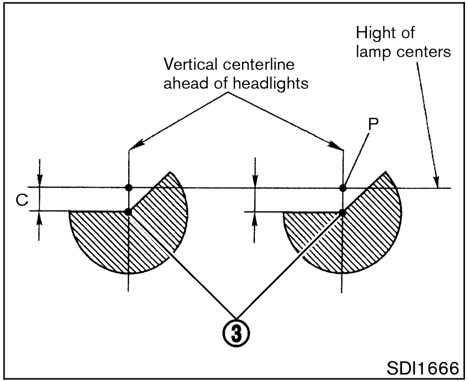

Be sure that the vehicle is parked directly vertical to the wall on which the headlights will be projected.

Adjusting the headlight aim

1. Turn on the headlight low beam.
2. Open the hood.
3. Turn the aiming adjustment screws (1) (2), located inside the engine compartment, until the headlight projection, on the wall or screen, does not move.

   NOTE:

   The aim adjustment screws are located on each side of the headlights. The lower screw (1) is used to adjust the horizontal aim. The upper screw (2) is used to adjust the vertical aim.

   The screws can be turned indefinitely in each direction. Therefore be sure to observe the headlight projection movement to determine the necessary turning amount.

4. Turn the lower screws (1) in the opposite direction until the headlight projection becomes 70 mm (2.76 in) below the point P. Once the left headlight has been adjusted, perform right side adjustment as well.

   "C" is the distance between point P and point (3).

5. Turn the upper screws (2) in the opposite direction until the horizontal headlight projection's turn point (3) is directly below the point P. Once the left headlight has been adjusted, perform right side adjustment as well.

EXTERIOR AND INTERIOR LIGHTS

Item	Wattage (W)	Bulb No.
Front turn signal light	21	T20
Front park light	5	T20
Side turn signal light	5	T10
Front side marker light	5	T10
Front fog light (if so equipped)*	55	H11
Rear combination light*		
Turn signal	21	S25
Stop/Tail	21/5	T20
Back-up	21	
License plate light	5	T10
High-mounted stop light	5	
Room light	10	
Map light	8	
Luggage room light	10	
Step light*	2.7	161
Rear side marker light	5	T10

*: See a NISSAN dealer for replacement.

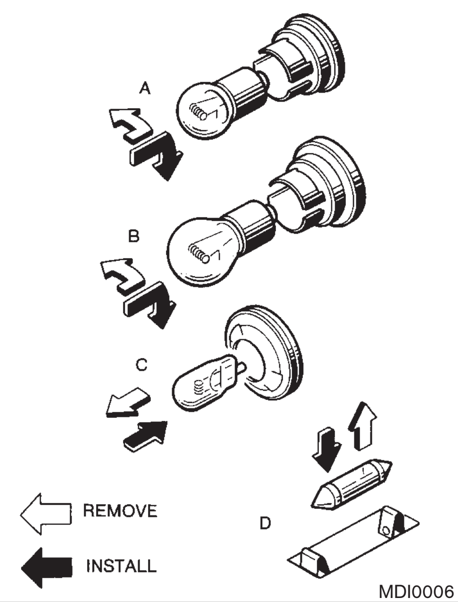

Replacement procedures

All other lights are either type A, B, C or D. When replacing a bulb, first remove the lens and/or cover.

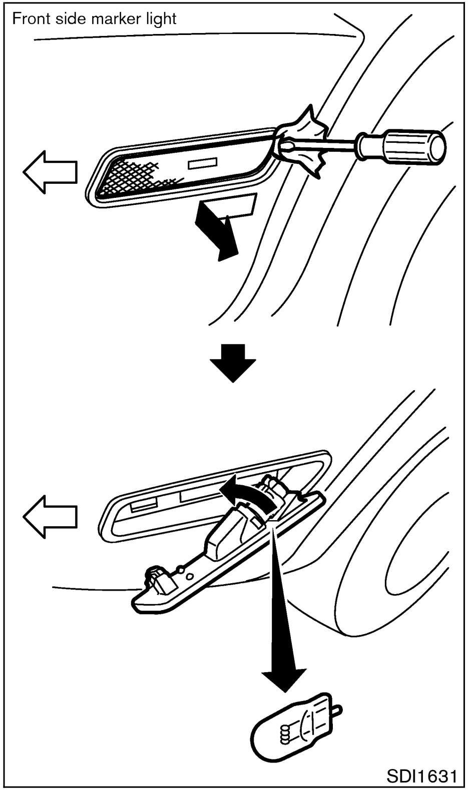
Front side marker light
SDI1631

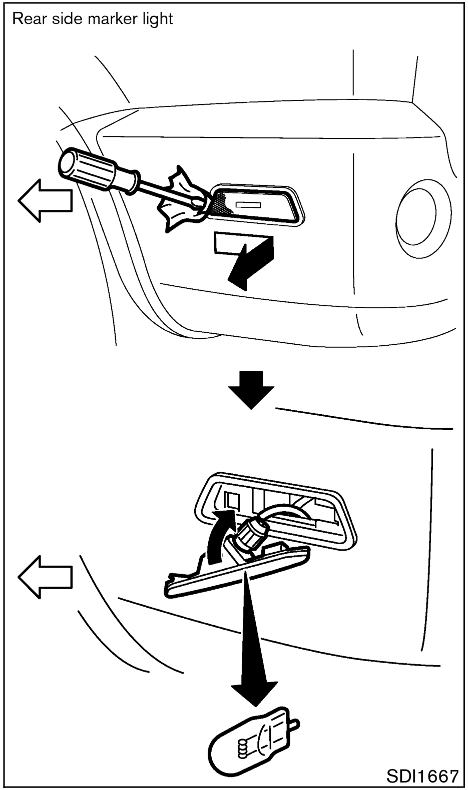
Rear side marker light
SDI1667

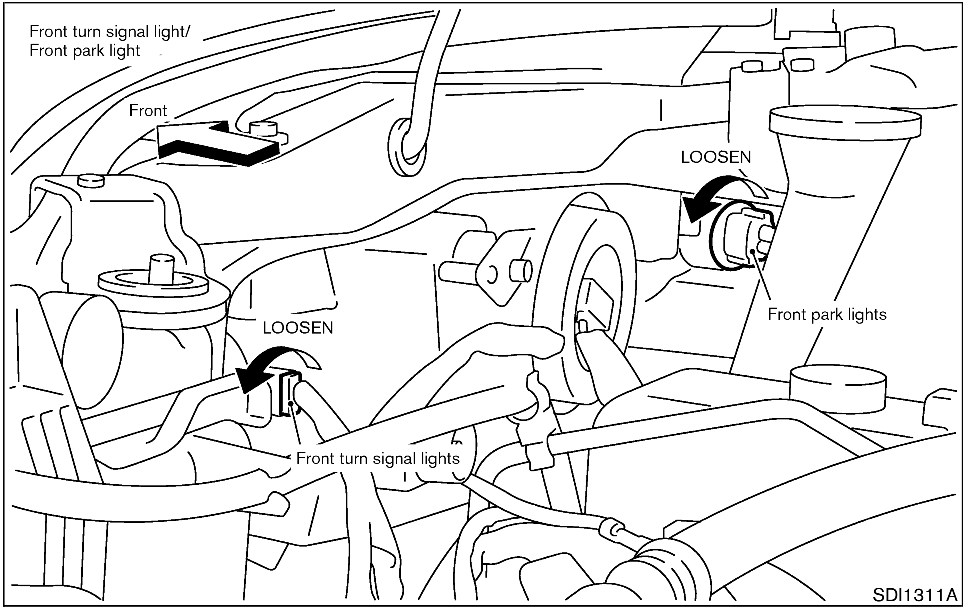

SDI1311A

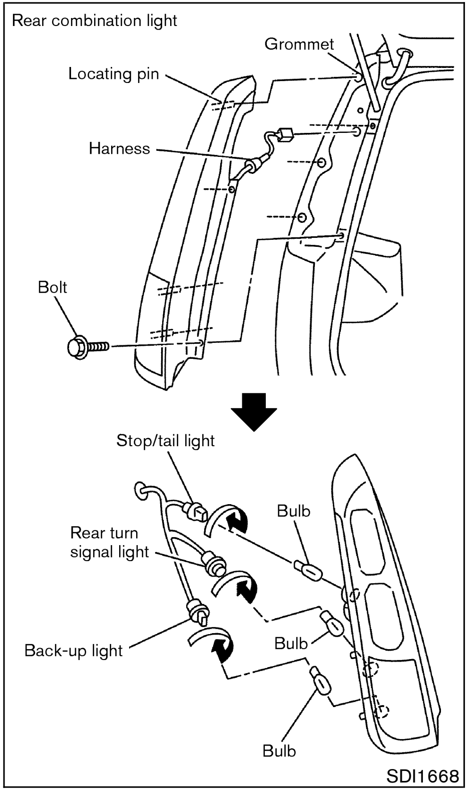

SDI1668

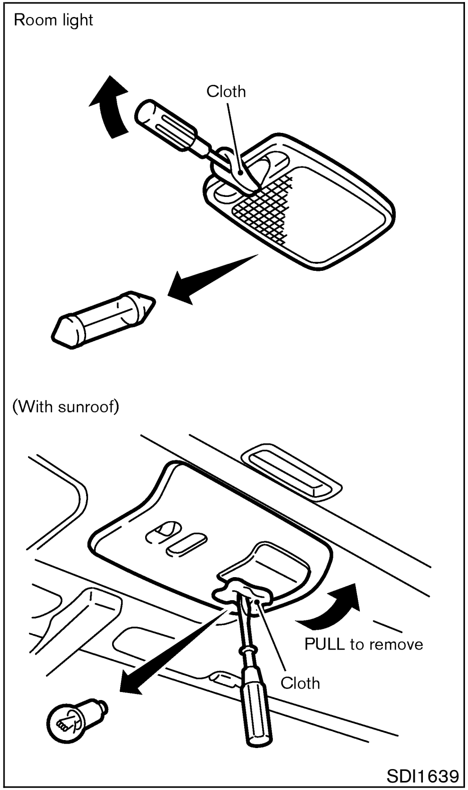
Room light
Cloth
(With sunroof)
PULL to remove
Cloth
SDI1639

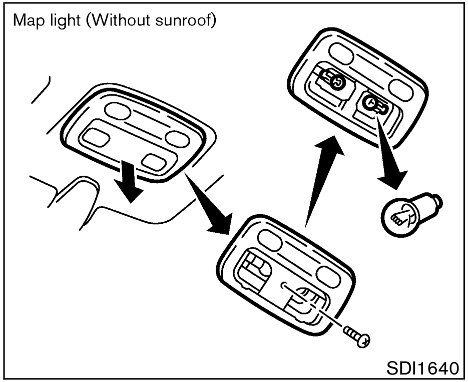
Map light (Without sunroof)
SDI1640

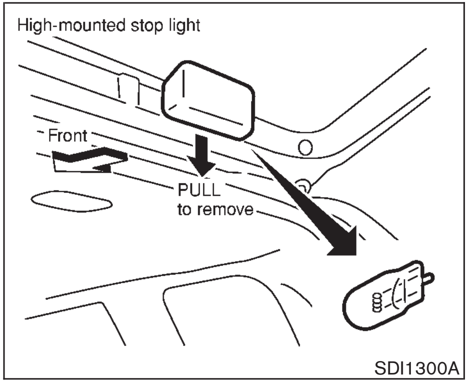
High-mounted stop light
Front
PULL
to remove
SDI1300A

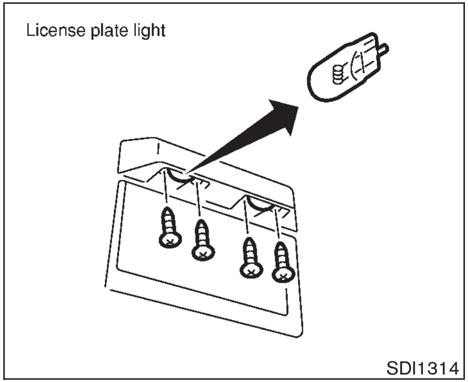
License plate light
SDI1314

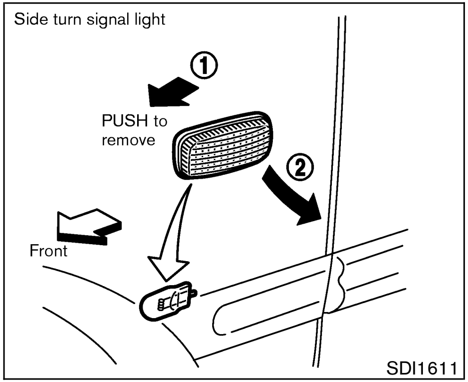
Side turn signal light
①
PUSH to
remove
②
Front
SDI1611

TIRE PRESSURE

Tire inflation pressure

Check the tire pressures (including the spare) often and always prior to long distance trips. The recommended tire pressure specifications are shown on the Tire and Loading Information label under the “Recommended Cold Tire Inflation Pressure” heading. The Tire and Loading Information label is affixed to the driver side center pillar. Tire pressures should be checked regularly because:

- Most tires naturally lose air over time.
- Tires can lose air suddenly when driven over potholes or other objects or if the vehicle strikes a curb while parking.

The tire pressures should be checked when the tires are cold. The tires are considered COLD after the vehicle has been parked for 3 or more hours, or driven less than 1.6 km (1 mile) at moderate speeds.

Incorrect tire pressure, including under inflation, may adversely affect tire life and vehicle handling.

WARNING

- **Improperly inflated tires can fail suddenly and cause an accident.**
- **The vehicle weight capacity is indicated on the Tire and Loading Information label. Do not load your vehicle beyond this capacity. Overloading your vehicle may result in reduced tire life, unsafe operating conditions due to premature tire failure, or unfavorable handling characteristics and could also lead to a serious accident. Loading beyond the specified capacity may also result in failure of other vehicle components.**
- **Before taking a long trip, or whenever you heavily load your vehicle, use a tire pressure gauge to ensure that the tire pressures are at the specified level.**
- **Do not drive your vehicle over 137 km/h (85 MPH) unless it is equipped with high speed rated tires. Driving faster than 137 km/h (85 MPH) may result in tire failure, loss of control and possible injury.**
- **For additional information regarding tires, refer to “Tire Safety Information” in the Warranty Information Booklet.**

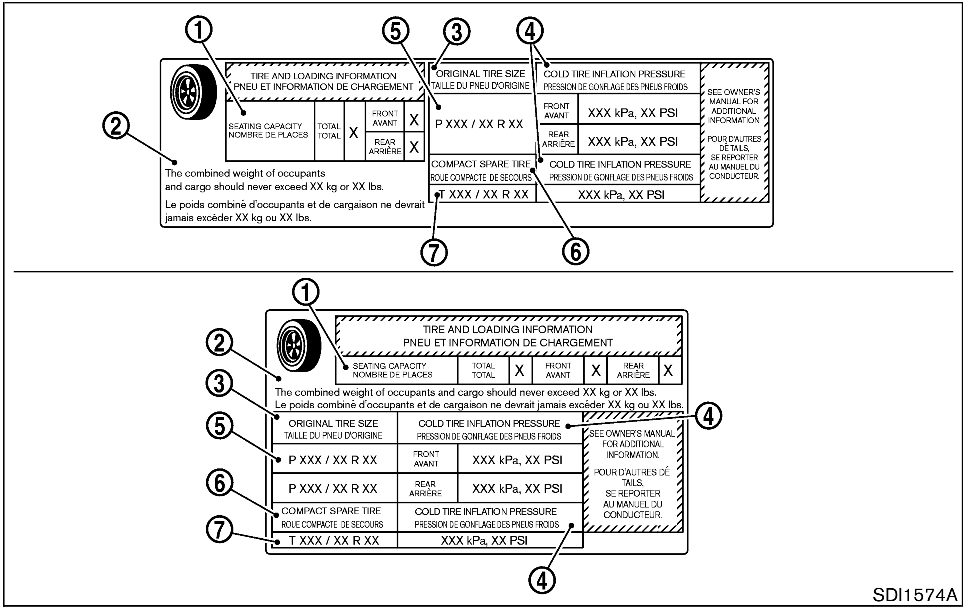

Tire and loading information label

① Seating capacity: The maximum number of occupants that can be seated in the vehicle.

② Vehicle load limit: See loading information in the Technical and consumer information section.

③ Original tire size: The size of the tires originally installed on the vehicle at the factory.

④ Recommended cold tire inflation pressure: Inflate the tires to this pressure when the tires are cold. Tires are considered COLD after the vehicle has been parked for 3 or more hours, or driven less than 1.6 km (1 mile) at moderate speeds. The recommended cold tire inflation is set by the manufacturer to provide the best tire wear and vehicle handling characteristics based on the vehicles GVWR.

⑤ Tire size — refer to “Tire labeling” later in this section.

⑥ and ⑦ Spare tire size or compact spare tire size (if so equipped)

Checking the tire pressure

1. Remove the valve stem cap from the tire.
2. Press the pressure gauge squarely onto the valve stem. Do not press too hard or force the valve stem sideways, or air will escape. If the hissing sound of air escaping from the tire is heard while checking the pressure, reposition the gauge to eliminate this leakage.
3. Remove the gauge.
4. Read the tire pressure on the gauge stem and compare it to the specification shown on the Tire and Loading Information label.
5. Add air to the tire as needed. If too much air

is added, press the core of the valve stem briefly with the tip of the gauge stem to release pressure. Recheck the pressure and add or release air as needed.

6. Install the valve stem cap.
7. Check the pressure of all other tires, including the spare. (Refer to the “Wheels and tires” section)

TIRE LABELING

Federal law requires tire manufacturers to place standardized information on the sidewall of all tires. This information identifies and describes the fundamental characteristics of the tire and also provides the tire identification number (TIN) for safety standard certification. The TIN can be used to identify the tire in case of a recall in case of recall.

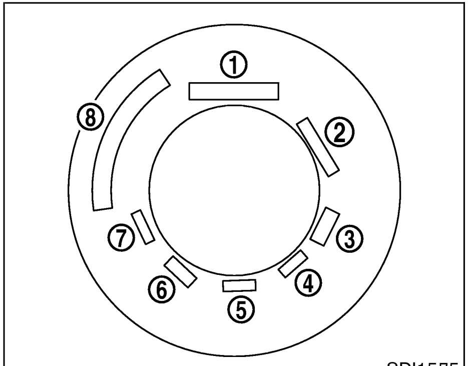

SDI1575

① Tire size (example: P215/60R16 94H)
P: The “P” indicates the tire is designed for passenger vehicles. (Not all tires have this information.)
Three-digit number (215): This number gives the width in millimeters of the tire from sidewall edge to sidewall edge.
Two-digit number (60): This number, known as the aspect ratio, gives the tire’s ratio of height to width.
R: The “R” stands for radial.
Two-digit number (16): This number is the wheel or rim diameter in inches.
Two- or three-digit number (94): This number is the tire’s load index. It is a measurement of how much weight each tire can support. You may not find this information on all tires because it is not required by law.

H: Speed Rating. The speed rating denotes the speed at which a tire is designed to be driven for extended periods of time. The ratings range from 157 km/h (98 MPH) to 298 km/h (186 MPH). (You may not find this information on all tires because it is not required by law.)

② TIN (Tire Identification Number) for new tire (example: DOT XX XX XXX XXXX)
DOT: Abbreviation for the “Department of Transportation”. The symbol can be placed above, below or to the left or right of the Tire Identification Number.
1st two-digit code: Manufacturer’s identification mark
2nd two-digit code: Tire size
3rd three-digit code: Tire type code (Optional)
4th four-digit code: Date of Manufacture
Four numbers represent the week and year the tire was built. For example, the numbers 3103 means the 31st week of 2003.

(3) Tire ply composition and material
The number of layers or plies of rubber-coated fabric in the tire.
Tire manufacturers also must indicate the materials in the tire, which include steel, nylon, polyester, and others.

(4) Maximum permissible inflation pressure
This number is the greatest amount of air pressure that should be put in the tire. Do not exceed the maximum permissible inflation pressure.

(5) Maximum load rating
This number indicates the maximum load in kilograms and pounds that can be carried by the tire. When replacing the tires on the vehicle, always use a tire that has the same load rating as the factory installed tire.

(6) Term of "tubeless" or "tube type"
Indicates that the tire requires an inner tube ("tube type") or not ("tubeless").

(7) The word "radial"
The word "radial" is shown, if the tire has radial structure.

(8) Manufacturer or Brand name
Manufacturer or Brand name is shown.

Other tire-related terminology

In addition to the many terms that are defined throughout this section, Intended Outboard Sidewall is (1) the sidewall that contains a whitewall, bears while lettering or bears manufacturer, brand and/or model name molding that is higher or deeper than the same molding on the other sidewall of the tire, or (2) the outward racing sidewall of an asymmetrical tire that has a particular side that must always face outward when mounted on a vehicle.

TYPES OF TIRES

CAUTION

- **When changing or replacing tires, be sure all four tires are of the same type (for example, summer, all season or snow) and construction. Your NISSAN dealer may be able to help you with information about tire type, size, speed rating and availability.**
- **Replacement tires may have a lower speed rating than the factory equipped tires, and may not match the potential maximum vehicle speed. Never exceed the maximum speed rating of the tire.**
- **For additional information regarding tires, refer to "Tire Safety Information" in the Warranty Information Booklet.**

All season tires

NISSAN specifies all season tires on some models to provide good performance for use all year round, including snowy and icy road conditions. All season tires are identified by ALL SEASON and/or M&S (Mud and Snow) on the tire sidewall. Snow tires have better snow traction than all season tires and may be more appropriate in some areas.

Summer tires

NISSAN specifies summer tires on some models to provide superior performance on dry roads. Summer tire performance is substantially reduced in snow and ice. Summer tires do not have the tire traction rating M&S (Mud and Snow) on the tire sidewall.

If you plan to operate your vehicle in snowy or icy conditions, NISSAN recommends the use of snow tires or all season tires on all four wheels.

Snow tires

If snow tires are needed, it is necessary to select tires equivalent in size and load rating to the original equipment tires. If you do not, it can adversely affect the safety and handling of your vehicle.

Generally, snow tires will have lower speed ratings than factory equipped tires and may not match the potential maximum vehicle speed. Never exceed the maximum speed rating of the tire.

If you operate your vehicle in snowy or icy conditions, NISSAN recommends the use of snow or all season tires on all four wheels.

For additional traction on icy roads, studded tires may be used. However, some provinces and states prohibit their use. Check local, state and provincial laws before installing studded tires. Skid and traction capabilities of studded snow tires, on wet or dry surfaces, may be poorer than that of non-studded snow tires.

Four wheel drive models

CAUTION

Always use tires of the same size, brand, construction (bias, bias-belted or radial), and tread pattern on all four wheels. Failure to do so may result in a circumference difference between tires on the front and rear axles which will cause excessive tire wear and may damage the transmission, transfer case and differential gears.

If excessive tire wear is found, it is recommended that all four tires be replaced with tires of the same size, brand, construction and tread pattern. The tire pressure and wheel alignment should also be checked and corrected as necessary. Contact your NISSAN dealer.

Tire chains must be installed only on the front wheels and not on the rear wheels.

Do not drive with tire chains on paved roads which are clear of snow. Driving with chains in such conditions can cause damage to the various mechanisms of the vehicle due to some overstress.

TIRE CHAINS

Use of tire chains may be prohibited according to location. Check the local laws before installing tire chains. When installing tire chains, make sure they are of proper size for the tires on your vehicle and are installed according to the chain manufacturer's suggestions. **Use only SAE class S chains.** Class "S" chains are used on vehicles with restricted tire to vehicle clearance. Vehicles that can use Class "S" chains are designed to meet the SAE standard minimum clearances between the tire and the closest vehicle suspension or body component required to accommodate the use of a winter traction device (tire chains or cables). The minimum clearances are determined using the factory equipped tire size. Other types may damage your vehicle. Use chain tensioners when recommended by the tire chain manufacturer to ensure a tight fit. Loose end links of the tire chain must be secured or removed to prevent the possibility of whipping action damage to the fenders or undercarriage. If possible, avoid fully loading your vehicle when using tire chains. In addition, drive at a reduced speed. Otherwise, your vehicle may be damaged and/or vehicle handling and performance may be adversely affected.

- **Do not use the chains on dry roads.**

Tire chains must be installed only on the

front wheels and not on the rear wheels.

Do not drive with tire chains on paved roads which are clear of snow. Driving with chains in such conditions can cause damage to the various mechanisms of the vehicle due to some overstress.

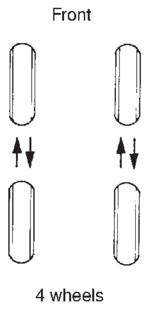

DI0048-B

CHANGING WHEELS AND TIRES

Tire rotation

NISSAN recommends rotating the tires every 12,000 km (7,500 miles). See "Flat tire" in the "6. In case of emergency" section for tire replacing procedures.

As soon as possible, tighten the wheel nuts to the specified torque with a torque wrench.

Wheel nut tightening torque:
108 N·m (11 kg-m, 80 ft-lb)

The wheel nuts must be kept tightened to specification at all times. It is recommended that wheel nuts be tightened to specification at each tire rotation interval.

WARNING

- **After rotating the tires, adjust the tire pressure.**
- **Retighten the wheel nuts when the vehicle has been driven for 1,000 km (600 miles) (also in cases of a flat tire, etc.).**
- **Do not include the T-type spare tire or any other small size spare tire in the tire rotation.**
- **For additional information regarding tires, refer to "Tire Safety Information" in the Warranty Information Booklet.**

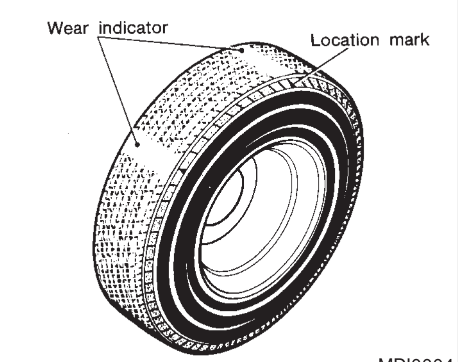

MDI0004

Tire wear and damage

WARNING

- **Tires should be periodically inspected for wear, cracking, bulging, or objects caught in the tread. If excessive wear, cracks, bulging, or deep cuts are found, the tire should be replaced.**
- **The original tires have a built-in tread wear indicator. When the wear indicator is visible, the tire should be replaced.**
- **Improper service for a spare tire may result in serious personal injury. If it is necessary to repair the spare tire, contact your NISSAN dealer.**
- **For additional information regarding tires, refer to "Tire Safety Information" in the Warranty Information Booklet.**

Replacing wheels and tires

When replacing a tire, use the same size, tread design, speed rating and load carrying capacity as originally equipped. See "Specifications" in the "9. Technical and consumer information" section for recommended types and sizes of tires and wheels.

WARNING

- **The use of tires other than those recommended or the mixed use of tires of different brands, construction (bias, bias-belted or radial), or tread patterns can adversely affect the ride, braking, handling, ground clearance, body-to-tire clearance, tire chain clearance, speedometer calibration, headlight aim and bumper height. Some of these effects may lead to accidents and could result in serious personal injury.**
- **If the wheels are changed for any reason, always replace with wheels which have the same offset dimension. Wheels of a different offset could cause premature tire wear, degrade vehicle handling characteristics and/or interfere with the brake discs/drums. Such interference can lead to decreased braking efficiency and/or early brake pad/shoe wear. Refer to "Wheel/tire size" in the "Technical and consumer information" section of this manual for wheel offset dimensions.**
- **Do not install a deformed wheel or tire even if it has been repaired. Such**

wheels or tires could have structural damage and could fail without warning.

- **The use of retread tire is not recommended.**
- **For additional information regarding tires, refer to "Tire Safety Information" in the Warranty Information Booklet.**

Wheel balance

Unbalanced wheels may affect vehicle handling and tire life. Even with regular use, wheels can get out of balance. Therefore, they should be balanced as required.

Wheel balance service should be performed with the wheels off the vehicle. Spin balancing the front wheels on the vehicle could lead to mechanical damage.

For additional information regarding tires, refer to "Tire Safety Information" in the Warranty Information Booklet.

Care of wheels

- Wash the wheels when washing the vehicle to maintain their appearance.
- Clean the inner side of the wheels when the wheel is changed or the underside of the vehicle is washed.
- Do not use abrasive cleaners when washing the wheels.
- Inspect wheel rims regularly for dents or corrosion. Such damage may cause loss of pressure or poor seal at the tire bead.
- NISSAN recommends waxing the road wheel sidewalls to protect against road salt in areas where it is used during winter.

MEMO

9 Technical and consumer information

Capacities and recommended fuel/lubricants 9-2
Fuel recommendation 9-3
Engine oil and oil filter recommendation 9-4
Recommended SAE viscosity number 9-5
Air conditioning system refrigerant and lubricant recommendations 9-6
Specifications 9-7
Engine 9-7
Wheels and tires 9-8
Dimensions and weights 9-8
When traveling or registering your vehicle in another country 9-9
Vehicle identification 9-9
Vehicle identification number (VIN) plate 9-9
Vehicle identification number (Chassis number) 9-9
Engine serial number 9-10
C.M.V.S.S. certification label 9-10
Emission control information label 9-10
Tire and loading information label 9-11
Air conditioner specification label 9-11
Vehicle loading information 9-11
Terms 9-11
Vehicle load capacity 9-12
Loading tips 9-13
Payload weight capacity 9-13
Measurement of weights 9-14
Towing a trailer 9-14
Maximum load limits 9-14
Towing load/specification chart 9-16
Towing safety 9-16
Uniform tire quality grading 9-18
Emission control system warranty 9-19
Readiness for inspection/maintenance (I/M) test 9-20
Owner's manual/service manual order information 9-21
In the event of a collision 9-21

CAPACITIES AND RECOMMENDED FUEL/ LUBRICANTS

The following are approximate capacities. The actual refill capacities may be a little different. When refilling, follow the procedure instructed in the “8. Maintenance and do-it-yourself” section to determine the proper refill capacity.

	Capacity (Approximate)			Recommended specifications
	US measure	Imp measure	Liter	
Fuel	15-7/8 gal	13-1/4 gal	60	Unleaded gasoline with an octane rating of at least 87 AKI (RON 91)*1
Engine oil*5 Drain and refill				
With oil filter change	4-3/8 qt	3-5/8 qt	4.1	● API Certification Mark*2, *3 ● API grade SG/SH, Energy Conserving I & II or API grade SJ or SL, Energy Conserving*2, *3 ● ILSAC grade GF-I, GF-II & GF-III*2, *3
Without oil filter change	3-7/8 qt	3-1/4 qt	3.7	
Cooling system With reservoir	7-1/2 qt	6-1/4 qt	7.1	Genuine NISSAN Long Life Antifreeze/Coolant or equivalent
Differential gear oil	—	—	—	API GL-5, Viscosity SAE 80W-90*4
Manual transmission gear oil	—	—	—	Genuine NISSAN Manual Transmission Fluid (MTF) HQ Multi 75W-85 or API GL-4, viscosity SAE 75W-85
Automatic transmission fluid	—	—	—	CANADA NISSAN Automatic Transmission Fluid (ATF), DEXRON™III/MERCON™ or equivalent ATF
Transfer fluid	—	—	—	API GL-5, Viscosity SAE 80W-90
Power steering fluid (PSF)	Refill to the proper oil level according to the instructions in the “8. Maintenance and do-it-yourself” section.			CANADA NISSAN Automatic Transmission Fluid (ATF), DEXRON™III/MERCON™ or equivalent ATF
Brake fluid				Genuine NISSAN Super Heavy Duty Brake Fluid or equivalent DOT 3 (CMVSS No. 116)
Multi-purpose grease	—	—	—	NLGI No. 2 (Lithium soap base)
Air conditioning system refrigerant	—	—	—	HFC-134a (R-134a)*6
Air conditioning system lubricants	—	—	—	NISSAN A/C System Oil Type S or exact equivalent
Windshield washer fluid				Genuine NISSAN Windshield Washer Concentrate Cleaner & Antifreeze Fluid or equivalent

*1: For additional information, see later in this paragraph for fuel recommendation.
*2: For additional information, see later in this paragraph for engine oil and oil filter recommendation.
*3: For additional information, see later in this paragraph for recommended SAE viscosity number.
*4: For hot climates, viscosity SAE 90 is suitable for ambient temperatures above 0°C (32°F).
*5: For additional information, see “Engine oil” in the “8. Maintenance and do-it-yourself” section for changing engine oil.
*6: For additional information, see “Vehicle identification” in this section for air conditioner specification label.

FUEL RECOMMENDATION

Use unleaded regular gasoline with an octane rating of at least 87 AKI (Anti-Knock Index) number (Research octane number 91).

CAUTION

Using a fuel other than that specified could adversely affect the emission control devices and systems, and could also affect the warranty coverage.

Under no circumstances should a leaded gasoline be used, since this will damage the three-way catalyst.

Gasoline specifications

NISSAN recommends using gasoline that meets the World-Wide Fuel Charter (WWFC) specifications where it is available. Many of the automobile manufacturers developed this specification to improve the emission control system and vehicle performance. Ask your service station manager if the gasoline meets the WWFC specifications.

Reformulated gasoline

Some fuel suppliers are now producing reformulated gasolines. These gasolines are specially designed to reduce vehicle emissions. NISSAN supports efforts towards cleaner air and suggests that you use reformulated gasoline when available.

Gasoline containing oxygenates

Some fuel suppliers sell gasoline containing oxygenates such as ethanol, MTBE and methanol with or without advertising their presence. NISSAN does not recommend the use of fuels of which the oxygenate content and the fuel compatibility for your NISSAN cannot be readily determined. If in doubt, ask your service station manager.

If you use oxygenate-blend gasoline, please take the following precautions as the usage of such fuels may cause vehicle performance problems and/or fuel system damage.

- **The fuel should be unleaded and have an octane rating no lower than that recommended for unleaded gasoline.**
- **If an oxygenate-blend, excepting a methanol blend, is used, it should contain no more than 10% oxygenate. (MTBE may, however, be added up to 15%.)**
- **If a methanol blend is used, it should contain no more than 5% methanol (methyl alcohol, wood alcohol). It should also contain a suitable amount of appropriate cosolvents and corrosion inhibitors. If not properly formulated with appropriate cosolvents and corrosion inhibitors, such methanol blends may cause fuel system damage and/or vehicle performance problems. At this time, sufficient data is not available to ensure that all methanol blends are suitable for use in NISSAN vehicles.**

If any undesirable driveability problems such as engine stalling and hard hot starting are experienced after using oxygenate-blend fuels, immediately change to a non-oxygenate fuel or a fuel with a low blend of MTBE.

Take care not to spill gasoline during refueling. Gasoline containing oxygenates can cause paint damage.

Aftermarket fuel additives

NISSAN does not recommend the use of any aftermarket fuel additives (for example, fuel injector cleaner, octane booster, intake valve deposit removers, etc.) which are sold commercially. Many of these additives intended for gum, varnish or deposit removal may contain active solvent or similar ingredients that can be harmful

to the fuel system and engine.

Octane rating tips

Using unleaded gasoline with an octane rating lower than recommended can cause persistent, heavy spark knock. (Spark knock is a metallic rapping noise.) If severe, this can lead to engine damage. If you detect a persistent heavy spark knock even when using gasoline of the stated octane rating, or if you hear steady spark knock while holding a steady speed on level roads, have your dealer correct the condition. Failure to correct the condition is misuse of the vehicle, for which NISSAN is not responsible.

Incorrect ignition timing will result in knocking, after-run or overheating. This in turn may cause excessive fuel consumption or damage to the engine. If any of the above symptoms are encountered, have your vehicle checked at a NISSAN dealer or other competent service facility.

However, now and then you may notice light spark knock for a short time while accelerating or driving up hills. This is no cause for concern, because you get the greatest fuel benefit when there is light spark knock for a short time under heavy engine load.

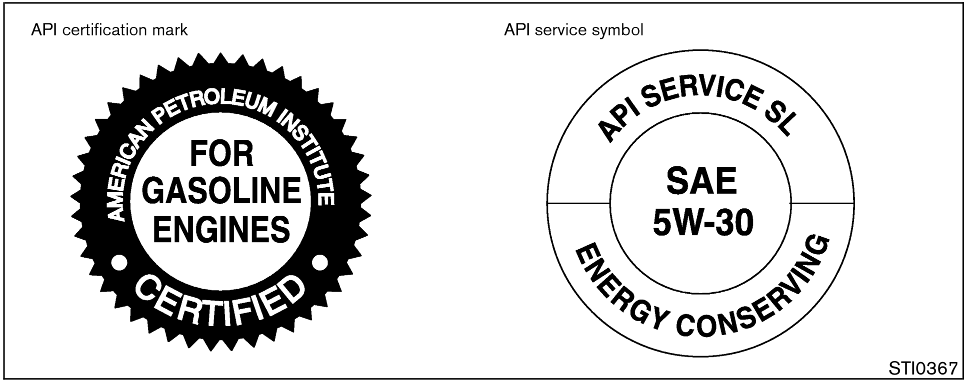

ENGINE OIL AND OIL FILTER RECOMMENDATION

Selecting the correct oil

It is essential to choose the correct quality, and viscosity oil to ensure satisfactory engine life and performance. NISSAN recommends the use of a low friction oil (energy conserving oil) in order to improve fuel economy and conserve energy. Oils which do not have the specified quality label should not be used as they could cause engine damage.

Only those engine oils with the American Petroleum Institute (API) certification mark on the front of the container should be used. This type of oil supersedes the existing API SG, SH, or SJ and Energy Conserving I & II categories.

If you cannot find engine oil with the API certification mark, use an API grade SG/SH, Energy Conserving I & II or API grade SJ or SL, Energy conserving oil. An oil with a single designation SG or SH, or in combination with other categories (for example, SG/CC or SG/CD) may also be used if one with the API certification mark cannot be found. An ILSAC grade GF-I, GF-II or GF-III oil can also be used.

NISSAN recommends mineral based oils. These oils must however, meet the API quality and SAE

viscosity ratings specified for your vehicle.

Oil additives

NISSAN does not recommend the use of oil additives. The use of an oil additive is not necessary when the proper oil type is used and maintenance intervals are followed.

Oil which may contain foreign matter or has been previously used should not be used.

Oil viscosity

The engine oil viscosity or thickness changes with temperature. Because of this, it is important that the engine oil viscosity be selected based on the temperatures at which the vehicle will be operated before the next oil change. The recommended SAE viscosity number chart shows the recommended oil viscosities for the expected ambient temperatures. Choosing an oil viscosity other than that recommended could cause serious engine damage.

Selecting the correct oil filter

Your new vehicle is equipped with a high-quality genuine NISSAN oil filter. When replacing, use the genuine oil filter or its equivalent for the reason described in change intervals.

Change intervals

The oil and oil filter change intervals for your engine are based on the use of the specified quality oils and filters. Oil and filter other than the specified quality, or oil and filter change intervals longer than recommended could reduce engine life. Damage to engines caused by improper maintenance or use of incorrect oil and filter quality and/or viscosity is not covered by the new NISSAN vehicle warranties.

Your engine was filled with a high quality engine oil when it was built. You do not have to change the oil before the first recommended change interval. Oil and filter change intervals depend upon how you use your vehicle. Operation under the following conditions may require more frequent oil and filter changes.

- repeated short distance driving at cold outside temperatures,
- driving in dusty conditions,
- extensive idling,
- towing a trailer,
- stop and go “rush hour” traffic,
- aggressive driving.

RECOMMENDED SAE VISCOSITY NUMBER

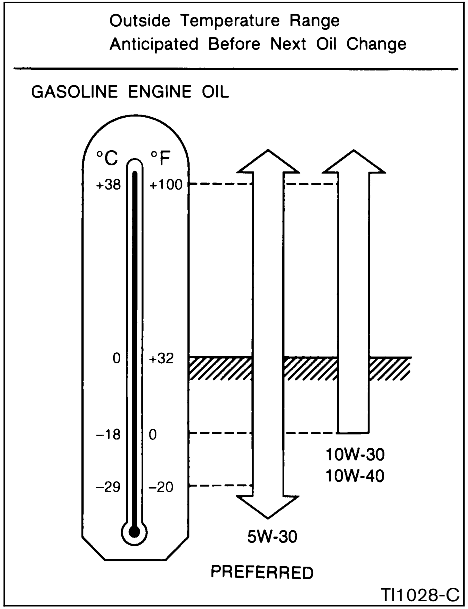

SAE 5W-30 viscosity oil is preferred for all ambient temperatures. SAE 10W-30, 10W-40 viscosity oil may be used if the ambient temperature is above −18°C (0°F).

AIR CONDITIONING SYSTEM REFRIGERANT AND LUBRICANT RECOMMENDATIONS

The air conditioning system in this NISSAN vehicle must be charged with the refrigerant HFC-134a (R-134a) and the lubricant, NISSAN A/C System Oil Type S or the exact equivalents.

CAUTION

The use of any other refrigerant or lubricant will cause severe damage to the air conditioning system and will require the replacement of all air conditioner system components.

The refrigerant HFC-134a (R-134a) in your NISSAN vehicle will not harm the earth's ozone layer. Although this refrigerant does not affect the earth's atmosphere, certain governmental regulations require the recovery and recycling of any refrigerant during automotive air conditioning system service. Your NISSAN dealer has the trained technicians and equipment needed to recover and recycle your air conditioning system refrigerant.

Contact your NISSAN dealer when servicing your air conditioning system.

SPECIFICATIONS

ENGINE

Model		QR25DE
Type		Gasoline, 4-cycle
Cylinder arrangement		4-cylinder, inline
Bore x Stroke	mm (in)	89.0 x 100.0 (3.504 x 3.937)
Displacement	cm^3 (cu in)	2,488 (151.82)
Firing order		1-3-4-2
Idle speed	rpm	See the emission control label on the underside of the hood.
Ignition timing (B.T.D.C.)	degree	
Spark plug	Standard	PLFR5A-11
	Service option	PLFR4A-11, PLFR6A-11
Spark plug gap (Normal)	mm (in)	0.043 (1.1)
Camshaft operation		Timing chain

The spark ignition system of this vehicle meets all requirements of the Canadian Interference-Causing Equipment Regulations.

WHEELS AND TIRES

Road wheel

Type	Size	Offset mm (in)
Steel	16 x 6-1/2JJ	40 (1.57)
Aluminum	16 x 6-1/2JJ	40 (1.57)

Tire

Type	Size	Pressure (cold)
Conventional	P215/65R16	220 kPa (32 PSI)
Spare	Conventional	—

DIMENSIONS AND WEIGHTS

Overall length	mm (in)	4,455 (175.4)
Overall width	mm (in)	1,765 (69.5)
Overall height with roof rack rail	mm (in)	1,675 (65.9)
Overall height with rear spoiler	mm (in)	1,750 (68.9)
Front tread	mm (in)	1,530 (60.2)
Rear tread	mm (in)	1,530 (60.2)
Wheelbase	mm (in)	2,625 (103.3)
Gross vehicle weight rating	kg (lb)	See the C.M.V.S.S. certification label on the driver's side lock pillar.
Gross axle weight rating		
Front	kg (lb)	
Rear	kg (lb)	

WHEN TRAVELING OR REGISTERING YOUR VEHICLE IN ANOTHER COUNTRY

When planning to travel in another country, you should first find out if the fuel available is suitable for your vehicle's engine.

Using fuel with too low an octane rating may cause engine damage. All gasoline vehicles must be operated with unleaded engine gasoline. Therefore, avoid taking your vehicle to areas where appropriate fuel is not available.

When transferring the registration of your vehicle to another country, state, province or district, it may be necessary to modify the vehicle to meet local laws and regulations.

The laws and regulations for motor vehicle emission control and safety standards vary according to the country, state, province or district; therefore, vehicle specifications may differ.

When any vehicle is to be taken into another country, state, province or district and registered, its modifications, transportation, and registration are the responsibility of the user. NISSAN is not responsible for any inconvenience that may result.

VEHICLE IDENTIFICATION

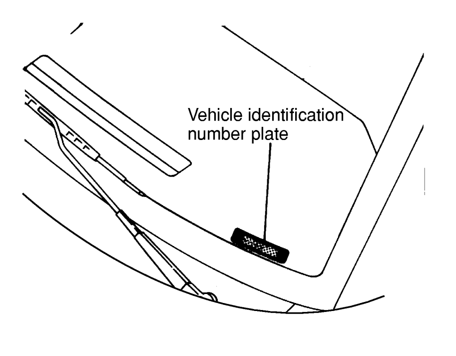

STI0301

VEHICLE IDENTIFICATION NUMBER (VIN) PLATE

The vehicle identification number plate is attached as shown. This number is the identification for your vehicle and is used in the vehicle registration.

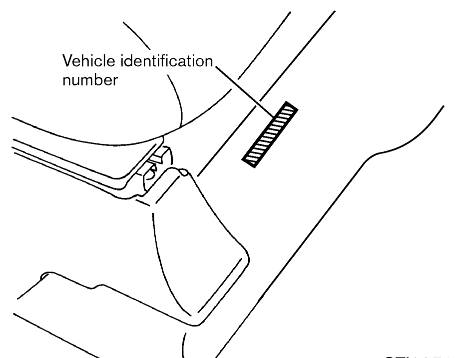

STI0371

VEHICLE IDENTIFICATION NUMBER (Chassis number)

The number is stamped under the passenger's seat as shown.

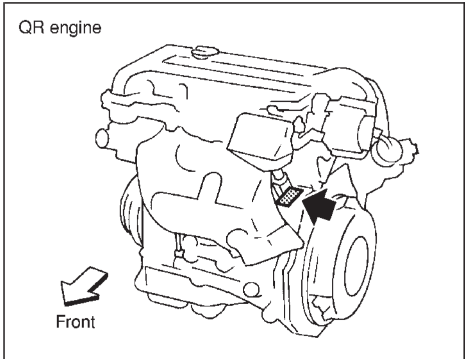

STI0286

ENGINE SERIAL NUMBER

The number is stamped on the engine as shown.

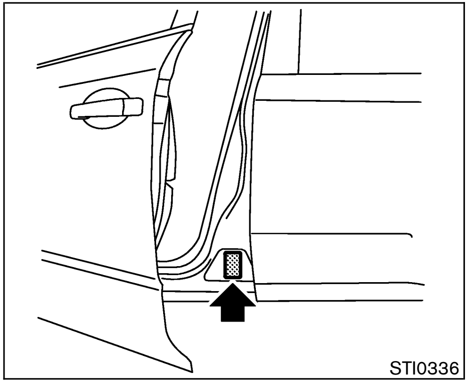
STI0336

C.M.V.S.S. CERTIFICATION LABEL

The Canadian Motor Vehicle Safety Standards (C.M.V.S.S.) certification label is affixed as shown. This label contains valuable vehicle information, such as: Gross Vehicle Weight Ratings (GVWR), Gross Axle Weight Rating (GAWR), month and year of manufacture, Vehicle Identification Number (VIN), etc. Review it carefully.

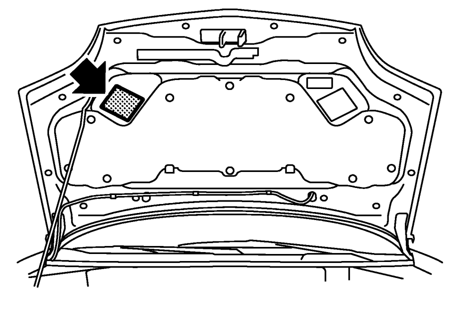
STI0393

EMISSION CONTROL INFORMATION LABEL

The emission control information label is attached as shown.

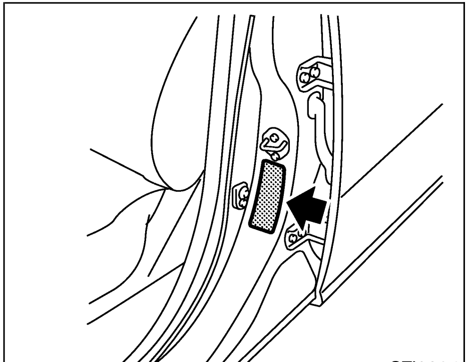
STI0394

TIRE AND LOADING INFORMATION LABEL

The cold tire pressure are shown on the Tire and Loading Information label affixed to the driver's door center pillar.

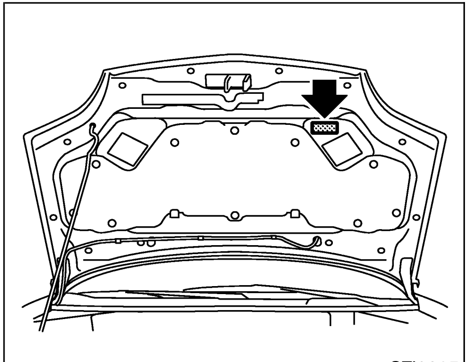
STI0395

AIR CONDITIONER SPECIFICATION LABEL

The air conditioner specification label is affixed inside of the hood as shown.

VEHICLE LOADING INFORMATION

WARNING

- **It is extremely dangerous to ride in a cargo area inside of a vehicle. In a collision, people riding in these areas are more likely to be seriously injured or killed**
- **Do not allow people to ride in any area of your vehicle that is not equipped with seats and seat belts.**
- **Be sure everyone in your vehicle is in a seat and using a seat belt properly.**

TERMS

It is important to familiarize yourself with the following terms before loading your vehicle:

- Curb Weight (actual weight of your vehicle) - vehicle weight including: standard and optional equipment, fluids, emergency tools, and spare tire assembly. This weight **does not** include passengers and cargo.
- GVW (Gross Vehicle Weight) - curb weight plus the combined weight of passengers and cargo.

- GVWR (Gross Vehicle Weight Rating) - maximum total combined weight of the unloaded vehicle, passengers, luggage, hitch, trailer tongue load and any other optional equipment. This information is located on the C.M.V.S.S. label.
- GAWR (Gross Axle Weight Rating) - maximum weight (load) limit specified for the front or rear axle. This information is located on the C.M.V.S.S. label.
- GCWR (Gross Combined Weight Rating) - The maximum total weight rating of the vehicle, passengers, cargo, and trailer.
- Vehicle Capacity Weight, Load limit, Total load capacity - maximum total weight limit specified of the load (passengers and cargo) for the vehicle. This is the maximum combined weight of occupants and cargo that can be loaded into the vehicle. If the vehicle is used to tow a trailer, the trailer tongue weight must be included as part of the cargo load. This information is located on the Tire and Loading Information label.
- Cargo capacity - permissible weight of cargo, the subtracted weight of occupants from the load limit.

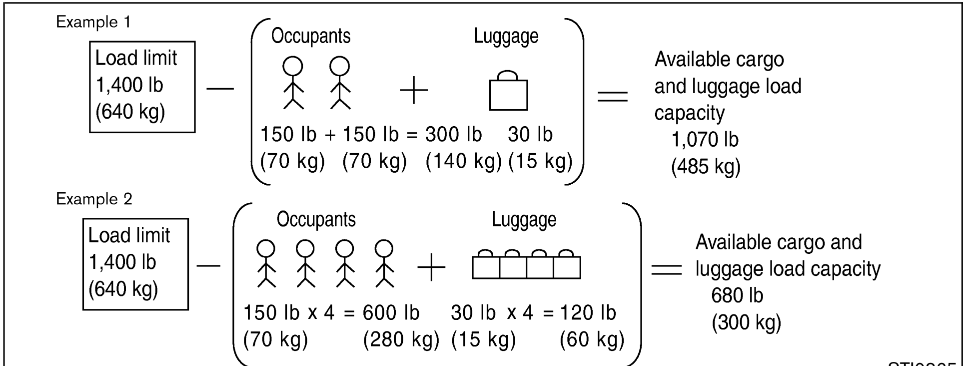

STI0365

VEHICLE LOAD CAPACITY

Do not exceed the load limit of your vehicle shown as "The combined weight of occupants and cargo" on the Tire and Loading Information label. Do not exceed the number of occupants shown as "Seating Capacity" on the Tire and Loading Information label.

To get "The combined weight of occupants and cargo", add the weight of all occupants, then add the total luggage weight. Examples are shown in the illustration.

Steps for determining correct load limit

(1) Locate the statement "The combined weight of occupants and cargo should never exceed XXX pounds or XXX kilograms" on your vehicle's placard.

(2) Determine the combined weight of the driver and passengers that will be riding in your vehicle.

(3) Subtract the combined weight of the driver and passengers from XXX pounds or XXX kilograms.

(4) The resulting figure equals the available amount of cargo and luggage load capacity. For example, if the "XXX" amount equals 1,400 lbs. and there will be five 150 lb. passengers in your vehicle, the amount of available cargo and luggage load capacity is 650 lbs. [1,400 – 750 (5 x 150) = 650 lbs.]

(5) Determine the combined weight of luggage and cargo being loaded on the vehicle. For safety, that weight must not exceed the available cargo and luggage load capacity calculated in Step 4.

(6) If your vehicle will be towing a trailer, load from your trailer will be transferred to your vehicle. Consult this manual to determine how this reduces the available cargo and luggage load capacity of your vehicle.

LOADING TIPS

There are luggage hooks located in the cargo area. The luggage hooks can be used to secure cargo with ropes or other types of straps.

- The GVW must not exceed GVWR or GAWR as specified on the C.M.V.S.S. certification label.
- Do not load the front and rear axle to the GAWR. Doing so will exceed the GVWR.

WARNING

- **Properly secure all cargo to help prevent it from sliding or shifting. Do not place cargo higher than the seatbacks. In a sudden stop or collision, unsecured cargo could cause personal injury.**
- **Do not load your vehicle any heavier than the GVWR or the maximum front and rear GAWRs. If you do, parts on your vehicle can break, or it can change the way your vehicle handles. This could result in loss of control and cause personal injury.**
- **Overloading not only can shorten the life of your vehicle and the tire, but can also cause unsafe vehicle handling and longer braking distances. This may cause a premature tire failure which could result in a serious accident and personal injury. Failures caused by overloading are not covered by the vehicle's warranty.**

PAYLOAD WEIGHT CAPACITY

The payload weight capacity is the maximum total weight of passengers, optional equipment (air conditioning, trailer hitch, etc.) and cargo that your vehicle is designed to carry.

Before driving a loaded vehicle, confirm that you do not exceed the Gross Vehicle Weight Rating (GVWR) or the Gross Axle Weight Rating (GAWR) for your vehicle. See "Vehicle loading information" earlier in this section for details.

Also check tires for proper inflation pressures. See the Tire and Loading Information label affixed to the driver's side center pillar.

Payload Weight Capacity Unit: kg (lb)		
QR25DE		
	2WD	4WD
Canada	570 (1,260)	470 (1,040)

MEASUREMENT OF WEIGHTS

Secure loose items to prevent weight shifts that could affect the balance of your vehicle. When the vehicle is loaded, drive to a scale and weigh the front and the rear wheels separately to determine axle loads. Individual axle loads should not exceed either of the gross axle weight ratings (GAWR). The total of the axle loads should not exceed the gross vehicle weight rating (GVWR). These ratings are given on the vehicle certification label that is located on the driver's door lock pillar. If weight ratings are exceeded, move or remove items to bring all weights below the ratings.

CAUTION

Overloading can shorten the life of your vehicle. Failures caused by overloading are not covered by your warranty.

TOWING A TRAILER

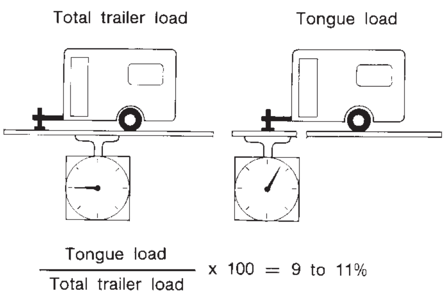

CA0009

Your new vehicle was designed to be used primarily to carry passengers and cargo. Remember that towing a trailer will place additional loads on your vehicle's engine, drive train, steering, braking and other systems.

CAUTION

Vehicle damage resulting from improper towing procedures is not covered by NISSAN warranties.

MAXIMUM LOAD LIMITS

Maximum trailer loads

Never allow the total trailer load to exceed the value specified in the Towing Load/Specification Chart found later in this section. The total trailer load equals trailer weight plus its cargo weight.

- When towing a trailer load of 454 kg (1,000 lbs.) or more, trailers with a brake system MUST be used.

The maximum GCWR (Gross Combined Weight Rating) should not exceed the value specified in the following Towing Load/Specification Chart.

The GCWR equals the combined weight of the towing vehicle (including passengers and cargo) plus the total trailer load. Towing loads greater than these or using improper towing equipment could adversely affect vehicle handling, braking and performance.

The ability of your vehicle to tow a trailer is not only related to the maximum trailer loads, but also the places you plan to tow. Tow weights appropriate for level highway driving may have to be reduced on very steep grades or in low traction situations (for example, on slippery boat ramps).

Temperature conditions also can affect towing. For example, towing a heavy trailer in high

outside temperatures on graded roads can affect engine performance and cause overheating. The transmission high fluid temperature protection mode, which helps reduce the chance of transmission damage, could activate and automatically decrease engine power. Vehicle speed may decrease to 65 to 80 km/h (40 to 50 MPH) under high load. Plan your trip carefully to account for trailer and vehicle load, weather, and road conditions.

WARNING

Overheating can result in reduced engine power and lower vehicle speed. Also, when the high temperature mode operates, vehicle speed may be gradually reduced. On highways, the reduced speed may be lower than other traffic which could increase the chance of a collision. Be especially careful when driving. If necessary, pull to the side of the road at a safe place and allow the engine to cool or the transmission to return to normal operation.

Tongue load

Keep the tongue load between 9 to 11% of the total trailer load within the maximum tongue load limits shown in the following Towing Load/Specifications Chart. If the tongue load becomes excessive, rearrange cargo to allow for proper tongue load.

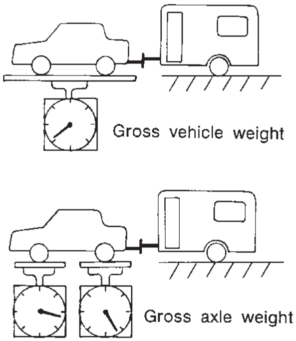

TI1012M

Maximum gross vehicle weight/ maximum gross axle weight

The gross vehicle weight of the towing vehicle must not exceed the gross vehicle weight rating (GVWR) shown on the C.M.V.S.S. certification label. The gross vehicle weight equals the combined weight of the unloaded vehicle, passengers, luggage, hitch, trailer tongue load and any other optional equipment. In addition, front or rear gross axle weight must not exceed the gross axle weight rating (GAWR) shown on the C.M.V.S.S. certification label.

TOWING LOAD/SPECIFICATION CHART

TOWING LOAD/SPECIFICATION CHART Unit: kg (lb)	
MODEL / WEIGHT	QR25DE
MAXIMUM TRAILER WEIGHT*1	907 (2,000)
MAXIMUM TONGUE LOAD	90.7 (200)
GROSS COMBINED WEIGHT RATING	2,649 (5,840)

*1: All towing above 454 kg (1,000 lb) requires the use of trailer brakes.

TOWING SAFETY

Trailer hitch

Choose a proper hitch for your vehicle and trailer. A genuine NISSAN trailer hitch is available from your NISSAN dealer. Make sure the trailer hitch is securely attached to the vehicle, to help avoid personal injury or property damage due to sway caused by crosswinds, rough road surfaces or passing trucks.

CAUTION

- **Do not use axle-mounted hitches.**
- **The hitch should not be attached to or affect the operation of the impact absorbing bumper.**
- **Do not modify the vehicle exhaust system, brake system, etc. to install a trailer hitch.**
- **After the hitch is removed, seal the bolt holes to prevent exhaust fumes, water or dust from entering the passenger compartment.**

- **Regularly check all hitch mounting bolts are securely mounted.**
- **To reduce the possibility of additional damage if your vehicle is struck from the rear, where practical, remove the hitch and/or receiver when not in use.**

Tire pressures

- When towing a trailer, inflate the vehicle tires to the recommended cold tire pressure indicated on the Tire and Loading Information label (located on the driver's door center pillar).
- Trailer tire condition, size, load rating and proper inflation pressure should be in accordance with the trailer and tire manufacturers' specifications.

Safety chain

Always use a suitable chains between your vehicle and the trailer. The safety chains should be crossed and should be attached to the hitch, not to the vehicle bumper or axle. Be sure to leave enough slack in the chain to permit turning corners.

Trailer lights

Trailer lights should comply with federal and/or local regulations. When wiring the vehicle for towing, connect the stop and tail light pickup into the vehicle electrical circuit.

Trailer brakes

If your trailer is equipped with a braking system, make sure it conforms to federal and/or local regulations and that it is properly installed.

WARNING

Never connect a trailer brake system directly to the vehicle brake system.

Pre-towing tips

- Be certain your vehicle maintains a level position when a loaded and/or unloaded trailer is hitched. Do not drive the vehicle if it has an abnormal nose-up or nose-down condition; check for improper tongue load, overload, worn suspension or other possible causes of either condition.
- Always secure items in the trailer to prevent load shifts while driving.
- Be certain your rear view mirrors conform to all federal, state or local regulations. If not, install any mirrors required for towing before driving the vehicle.

Trailer towing tips

In order to gain skill and an understanding of the vehicle's behavior, you should practice turning, stopping and backing up in an area which is free from traffic. Steering stability, and braking performance will be somewhat different than under normal driving conditions.

- Always secure items in the trailer to prevent load shift while driving.
- Avoid abrupt starts, acceleration or stops.
- Avoid sharp turns or lane changes.
- Always drive your vehicle at a moderate speed.
- Always block the wheels on both vehicle and trailer when parking. Parking on a slope is not recommended; however, if you must do so, and if your vehicle is equipped with automatic transmission, first block the wheels and apply the parking brake, and then move the selector lever into the P (Park) position. If you move the selector lever to the P (Park) position before blocking the wheels and applying the parking brake, transmission damage could occur.

- When going down a hill, shift into a lower gear and use the engine braking effect. When going up a long grade, downshift the transmission to a lower gear and reduce speed to reduce chances of engine overloading and/or overheating.
- If the engine coolant rises to an extremely high temperature when the air conditioning system is on, turn off the air conditioner. Coolant heat can be additionally vented by opening the windows, switching the fan control to high and setting the temperature control to the HOT position.
- Trailer towing requires more fuel than normal circumstances.
- Avoid towing a trailer for the first 800 km (500 miles).
- Have your vehicle serviced more often than at intervals specified in the recommended maintenance schedule.
- When making a turn, your trailer wheels will be closer to the inside of the turn than your vehicle wheels. To compensate for this, make a larger than normal turning radius during the turn.
- Crosswinds and rough roads will adversely affect vehicle/trailer handling, possibly causing vehicle sway. When being passed by larger vehicles, be prepared for possible changes in crosswinds that could affect vehicle handling. If swaying does occur, firmly grip the steering wheel, steer straight ahead, and immediately (but gradually) reduce vehicle speed. This combination will help stabilize the vehicle. Never increase speed.
- Be careful when passing other vehicles. Passing while towing a trailer requires considerably more distance than normal passing. Remember the length of the trailer must also pass the other vehicle before you can safely change lanes.
- Avoid holding the brake pedal down too long or too frequently. This could cause the brakes to overheat, resulting in reduced braking efficiency.

UNIFORM TIRE QUALITY GRADING

DOT (Department Of Transportation) Quality Grades: All passenger car tires must conform to federal safety requirements in addition to these grades.

Quality grades can be found where applicable on the tire sidewall between tread shoulder and maximum section width. For example:

Treadwear 200 Traction AA Temperature A

Treadwear

Treadwear grade is a comparative rating based on tire wear rate when tested under controlled conditions on specified government test courses. For example, a tire graded 150 would wear one and a half (1-1/2) times as well on the government course as a tire graded 100. However, relative tire performance depends on actual driving conditions, and may vary significantly from the norm due to variations in driving habits, service practices and differences in road characteristics and climate.

Traction AA, A, B and C

The traction grades, from highest to lowest, are AA, A, B, and C. Those grades represent the tire’s ability to stop on wet pavement as measured under controlled conditions on specified government test surfaces of asphalt and con-

crete. A tire marked C may have poor traction performance.

WARNING

The traction grade assigned to your vehicle tires is based on straight-ahead braking traction tests, and does not include acceleration, cornering, hydroplaning, or peak traction characteristics.

Temperature A, B and C

Temperature grades are A (the highest), B, and C. They represent a tire's resistance to heat build-up, and its ability to dissipate heat when tested under controlled conditions on a specified indoor laboratory test wheel. Sustained high temperature can cause tire material to degenerate, reducing tire life. Excessive temperatures can lead to sudden tire failure. Grade C corresponds to a performance level which all passenger car tires must meet under the Federal Motor Vehicle Safety Standard No. 109. Grades A and B represent higher levels of performance on laboratory test wheels than the minimum required by law.

WARNING

The temperature grade for this tire is established for a tire that is properly inflated and not overloaded. Excessive speed, underinflation, or excessive loading, either separately or in combination, can cause heat buildup and possible tire failure.

EMISSION CONTROL SYSTEM WARRANTY

Your NISSAN is covered by the following emission warranties.

Emission Control System Warranty

Details of these warranties may be found with other vehicle warranties in your Warranty Information Booklet that comes with your NISSAN vehicle. If you did not receive a Warranty Information Booklet or it has become lost, you may obtain a replacement by writing to:

- Nissan Canada Inc.
  5290 Orbitor Drive
  Mississauga, Ontario,
  L4W 4Z5

READINESS FOR INSPECTION/ MAINTENANCE (I/M) TEST

WARNING

A vehicle equipped with 4WD should never be tested using a two wheel dynamometer, similar to the dynamometers used by some states for emissions testing, or similar equipment. Make sure you inform the test facility personnel that your vehicle is a 4WD equipped vehicle before it is placed on a dynamometer. Failure to do so may result in transmission damage or unexpected vehicle movement which could result in serious vehicle damage or personal injury.

Due to legal requirements in some states and Canadian provinces, your vehicle may be required to be in what is called the "ready condition" for an Inspection/Maintenance (I/M) test of the emission control system.

The vehicle is set to the "ready condition" when it is driven through certain driving patterns. Usually, the "ready condition" can be obtained by ordinary usage of the vehicle.

If a powertrain system component is repaired or the battery is disconnected, the vehicle may be reset to a not "ready condition". Before taking the I/M test, check the vehicle's inspection/maintenance test readiness condition. Turn the ignition switch ON without starting the engine. If the Malfunction Indicator Lamp (MIL) comes on steady for 20 seconds and then blinks for 10 seconds, the I/M test condition is "not ready". If the MIL does not blink after 20 seconds, the I/M test condition is "ready".

If the MIL indicates the vehicle is in a "not ready" condition, drive the vehicle through the following pattern to set the vehicle to the ready condition. If you cannot or do not want to perform the driving pattern, a NISSAN dealer can conduct it for you.

WARNING

Always drive the vehicle in a safe and prudent manner according to traffic conditions, and obey all traffic laws.

1. Start the engine. Allow the engine to idle until the engine coolant temperature gauge needle points between the C and H (normal operating temperature).
2. Accelerate the vehicle to 88 km/h (55 MPH), then quickly release the accelerator pedal completely and keep it released for at least 6 seconds.
3. Quickly depress the accelerator pedal for a moment, then drive the vehicle at a speed of 86 to 96 km/h (53 to 60 MPH) for at least 5 minutes.
4. Stop the vehicle. Leave the engine running.
5. Accelerate the vehicle to 55 km/h (35 MPH) and maintain the speed for 20 seconds.
6. Repeat steps 4 and 5 at least 3 times.
7. Accelerate the vehicle to 88 km/h (55 MPH) and maintain the speed for at least 3 minutes.
8. Stop the vehicle. Place the transmission selector lever in the "P" or "N" position.
9. Turn the engine off.
10. Repeat steps 1 through 8 at least one more time.

If step 1 through 7 is interrupted, repeat the preceding step. Any safe driving mode is acceptable between steps. Do not stop the engine until step 7 is completed.

OWNER'S MANUAL/SERVICE MANUAL ORDER INFORMATION

Genuine Nissan Service Manuals

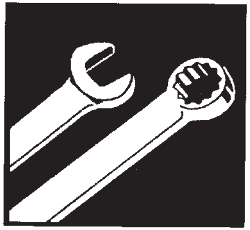

GET THE INSIDE STORY

A genuine NISSAN Service Manual is the best source of service and repair information for your vehicle. Filled with wiring diagrams, illustrations and step-by-step diagnostic and adjustment procedures, this manual is the same one used by the factory trained technicians working at authorized NISSAN dealerships. Also available are genuine NISSAN Owner's Manuals, and genuine NISSAN Service and Owner's Manuals for older NISSAN models.

To purchase a copy of a genuine NISSAN Service Manual or Owner's Manual please contact your nearest NISSAN dealer. For the phone number and location of a NISSAN Dealer in your area call the NISSAN Satisfaction Center at 1-800-387-0122 and a bilingual NISSAN representative will assist you.

IN THE EVENT OF A COLLISION

Unfortunately, accidents do occur. In this unlikely event, there is some important information you should know. Many insurance companies routinely authorize the use of non-genuine collision parts in order to cut costs, among other reasons.

Insist on the use of Genuine NISSAN Collision Parts!

If you want your vehicle to be restored using parts made to NISSAN's original exacting specifications — if you want to help it to last and hold its resale value, the solution is simple. **Tell your insurance agent and your repair shop to only use Genuine NISSAN Collision Parts.** NISSAN does not warrant non-NISSAN parts, nor does NISSAN's warranty apply to damage caused by a non-genuine part.

Using Genuine NISSAN Parts can help protect your personal safety, preserve your warranty protection and maintain the resale value of your vehicle. And if your vehicle was leased, using Genuine NISSAN Parts may prevent or limit unnecessary excess wear and tear expenses at the end of your lease.

NISSAN designs its hoods with crumple zones to minimize the risk that the hood will penetrate the windshield of your vehicle in an accident. Non-genuine (imitation) parts may not provide

such built in safeguards. Also, non-genuine parts often show premature wear, rust and corrosion.

Why should you take a chance?

In over 40 states and certain territories/provinces, the law says you must be advised if non-genuine parts are used to repair your vehicle. And some states and provinces have enacted laws that restrict insurance companies from authorizing the use of non-genuine collision parts during the new vehicle warranty. These laws help protect you, so you can take action to protect yourself.

It's your right!

If you should need further information visit us at: www.nissan.ca.

10 Index

A

ABS (Anti-lock brake system)........ 5-25
Air bag warning labels........ 1-41
Air bag warning light........ 1-41, 2-9
Air cleaner housing filter........ 8-18
Air conditioner
  Air conditioner service........ 4-9
  Air conditioner specification label........ 9-11
  Air conditioning system refrigerant and lubricant recommendations........ 4-9, 9-6
  In-cabin microfilter........ 4-6, 4-9
Alcohol, drugs and driving........ 5-4
Anchor point locations
  Top tether strap........ 1-27
Antenna........ 4-11
Anti-lock Brake System (ABS)........ 5-25
Anti-lock brake warning light........ 2-7
Appearance care
  Exterior appearance care........ 7-2
  Interior appearance care........ 7-3
Armrest........ 1-9
Audible reminders........ 2-12
Audio operation precautions........ 4-10
Audio system........ 4-10
Autochanger, Compact Disc (CD)........ 4-17
Automatic
  Automatic transmission fluid (ATF)........ 8-13
  Driving with automatic transmission........ 5-6, 5-10
  Transmission selector lever lock release........ 5-12
Avoiding collision and rollover........ 5-3

B

Back door........ 3-8
Battery........ 8-15
Battery replacement
  Intelligent Key system........ 3-6
  Remote keyless entry system........ 3-6
Before starting the engine........ 5-9
Belts (See drive belts)........ 8-17
Brake
  Anti-lock brake system (ABS)........ 5-25
  Brake and clutch fluid........ 8-14
  Brake booster........ 8-22
  Brake pedal........ 8-21
  Brake pedal check........ 8-21
  Brake system........ 5-24
  Parking brake check........ 5-15, 8-21
  Parking brake operation........ 5-15
  Warning light........ 2-8
Break-in schedule........ 5-18
Brightness control, Instrument panel........ 2-18
Bulb check/instrument panel........ 2-7
Bulb replacement........ 8-26

C

Cabin air filter........ 4-6, 4-9
Capacities and recommended fuel/lubricants........ 9-2
Car phone or CB radio........ 4-24
Cargo (See vehicle loading information)........ 2-30
Cargo net........ 2-30
Cassette player (See audio system)........ 4-16
Catalytic converter, Three way catalyst........ 5-3
CD care and cleaning........ 4-24
Child restraints........ 1-18
  Installation on front passenger seat........ 1-28
  Installation on rear seat center or outboard positions........ 1-20
  Precautions on child restraints........ 1-18
  Top tether strap anchor point locations........ 1-27
  With top tether strap........ 1-26
Child safety........ 1-13
Child safety rear door lock........ 3-4
Chimes
  Audible reminders........ 2-12
  Seat belt warning light and chime........ 2-9
Circuit breaker, Fusible link........ 8-23
Cleaning exterior and interior........ 7-2, 7-3
Clock........ 2-22
Clutch fluid........ 8-14
Cold weather driving........ 5-27
Compact Disc (CD) changer operation........ 4-17

Compact Disc (CD) player (See audio system) 4-22
Console box 2-29
Coolant
  Capacities and recommended fuel/ lubricants 9-2
  Changing engine coolant 8-9
  Checking engine coolant level 8-8
Corrosion protection 7-5
Cover, Tonneau cover 2-31
Cruise control 5-16
Cup holders 2-26
CVT, Transmission selector lever lock release 5-12

D

Defroster switch, Rear window and outside mirror defroster switch 2-16
Dimensions and weights 9-8
Door open warning light 2-8
Drive belts 8-17
Driving
  Cold weather driving 5-27
  Driving with automatic transmission 5-6, 5-10
  Driving with manual transmission 5-7, 5-14
  On-pavement and offroad driving 5-4
  Precautions when starting and driving 5-2
  Safety precautions 5-4

E

Economy, Fuel 5-18
Emission control information label 9-10
Emission control system warranty 9-19
Engine
  Before starting the engine 5-9
  Break-in schedule 5-18
  Capacities and recommended fuel/ lubricants 9-2
  Changing engine coolant 8-9
  Changing engine oil 8-11
  Changing engine oil filter 8-12
  Checking engine coolant level 8-8
  Checking engine oil level 8-10
  Coolant temperature gauge 2-5
  Engine block heater 5-29
  Engine compartment check locations 8-7
  Engine cooling system 8-8
  Engine oil 8-10
  Engine oil and oil filter recommendation 9-4
  Engine oil viscosity 9-5
  Engine serial number 9-10
  Engine specifications 9-7
  If your vehicle overheats 6-8
  Starting the engine 5-9
Exhaust gas (Carbon monoxide) 5-2

F

Filter
  Air cleaner housing filter 8-18
  Changing engine oil filter 8-12
Flashers (See hazard warning flasher switch) 2-19
Flat tire 6-2
Floor mat cleaning 7-4
Fluid
  Automatic transmission fluid (ATF) 8-13
  Brake and clutch fluid 8-14
  Capacities and recommended fuel/ lubricants 9-2
  Engine coolant 8-8
  Engine oil 8-10
  Power steering fluid 8-14
  Window washer fluid 8-15
FM-AM radio with cassette player and Compact Disc (CD) changer 4-14
FM-AM radio with Compact Disc (CD) player 4-20
Fog light switch 2-19
Front manual seat adjustment 1-2
Front power seat adjustment 1-4
Fuel
  Capacities and recommended fuel/ lubricants 9-2
  Filler cap 3-10
  Filler lid 3-10
  Fuel economy 5-18
  Fuel octane rating 9-3
  Fuel recommendation 9-3
  Gauge 2-5
Fuses 8-22
Fusible links 8-23

G

Gas cap 3-10
Gauge 2-3
  Engine coolant temperature gauge 2-5
  Fuel gauge 2-5
  Odometer 2-4
  Speedometer 2-4

Tachometer 2-4
General maintenance 8-2
Glove box 2-28
Glove box lock 2-28

H

Hazard warning flasher switch 2-19
Head restraints 1-8
Headlights
Bulb replacement 8-27
Headlight switch 2-17
Heated seats 2-20
Heater, Engine coolant heater 5-29
Hood release 3-8
Hook, Luggage hook 2-29
Horn 2-20

I

Ignition switch 5-6
Automatic transmission models 5-6, 5-10
Key positions 5-8
Manual transmission models 5-7, 5-14
Immobilizer system 2-14
In-cabin microfilter 4-6, 4-9
Indicator lights 2-10
Instrument brightness control 2-18
Instrument panel 2-2
Interior light replacement 8-30
Interior lights 2-35

J

Jump starting 6-6

K

Keyless entry (See remote keyless entry system) 3-4
Keys 3-2

L

Label, Air conditioner specification label 9-11
Label, Emission control information label 9-10
Labels
Air bag warning labels 1-41
Engine serial number 9-10
Vehicle identification number (VIN) 9-9
Light
Air bag warning light 1-41
Bulb replacement 8-26
Fog light switch 2-19
Headlight aiming 8-29
Headlight switch 2-17
Headlights Bulb replacement 8-27
Interior lights 2-35
Replacement 8-26
Warning/indicator lights and audible reminders 2-7, 2-10
Lights, Exterior and interior light replacement 8-30
Loading information (See vehicle loading information) 9-11
Lock
Back door lock 3-8
Glove box lock 2-28
Luggage hooks 2-29

M

Maintenance
Battery 8-15
General maintenance 8-2
Inside the vehicle 8-3
Maintenance precautions 8-5
Maintenance requirements 8-2
Outside the vehicle 8-2
Seat belt maintenance 1-18
Under the hood and vehicle 8-4
Malfunction indicator lamp (MIL) 2-10
Manual front seat adjustment 1-2
Meters and gauges 2-3
Meters and gauges, Instrument brightness control 2-18
Mirror, Vanity mirror 3-13

N

Net, Cargo net 2-30
New vehicle break-in 5-18
Nissan Vehicle Immobilizer System 2-12
Engine start 5-8

O

Odometer 2-4

Oil
- Capacities and recommended fuel/lubricants ... 9-2
- Changing engine oil ... 8-11
- Checking engine oil level ... 8-10
- Engine oil ... 8-10
- Engine oil viscosity ... 9-5

Overdrive switch ... 5-13
Overheat, If your vehicle overheats ... 6-8
Owner's Manual/Service Manual order information ... 9-21

P

Parking
- Brake check ... 8-21
- Parking brake check ... 5-15
- Parking brake operation ... 5-15
- Parking on hills ... 5-15

Parking/parking on hills ... 5-23
Phone, Car phone or CB radio ... 4-24
Power
- Front seat adjustment ... 1-4
- Power outlet ... 2-23
- Power steering fluid ... 8-14
- Power steering system ... 5-24
- Power windows ... 2-32

Pre-tensioner seat belt system ... 1-39
Precautions
- Audio operation ... 4-10
- Braking precautions ... 5-24
- Child restraints ... 1-18
- Cruise control ... 5-16
- Driving safety ... 5-4
- Maintenance ... 8-5
- On-pavement and offroad driving ... 5-4
- Seat belt usage ... 1-10
- Supplemental restraint system ... 1-31
- When starting and driving ... 5-2

Push starting ... 6-8

R

Radio
- Car phone or CB radio ... 4-24
- FM-AM radio with cassette player and Compact Disc (CD) changer ... 4-14
- FM-AM radio with Compact Disc (CD) player ... 4-20

Rear center seat belt ... 1-17
Rear door lock, Child safety rear door lock ... 3-4
Rear power point ... 2-23
Rear seat adjustment ... 1-6
Rear window and outside mirror defroster switch ... 2-16
Rear window wiper and washer switch ... 2-16
Registering your vehicle in another country ... 9-9
Remote keyless entry system ... 3-4
Rollover ... 5-3

S

Safety
- Child seat belts ... 1-13
- Towing safety ... 9-16

Seat
- Belt warning light ... 1-10
- Belt warning light and chime ... 2-9

Seat adjustment
- Front manual seat adjustment ... 1-2
- Front power seat adjustment ... 1-4
- Rear seat adjustment ... 1-6

Seat belt(s)
- Child safety ... 1-13
- Infants and small children ... 1-13
- Injured persons ... 1-14
- Larger children ... 1-13
- Pre-tensioner seat belt system ... 1-39
- Precautions on seat belt usage ... 1-10
- Pregnant women ... 1-13
- Rear center seat belt ... 1-17
- Seat belt cleaning ... 7-4
- Seat belt extenders ... 1-18
- Seat belt maintenance ... 1-18
- Seat belts ... 1-10
- Shoulder belt height adjustment ... 1-16
- Three-point type with retractor ... 1-14

Seat(s)
- Heated seats ... 2-20
- Seats ... 1-2

Security system, Vehicle security system ... 2-12
Security systems (Nissan Vehicle Immobilizer System), Engine start ... 2-14
Security systems (See vehicle security system) ... 2-12
Servicing air conditioner ... 4-9
Shift lock release ... 5-12
Shift lock release, CVT ... 5-12
Shifting
- Automatic transmission ... 5-6, 5-10
- Manual transmission ... 5-7, 5-14

Shoulder belt height adjustment, For front seats 1-16
Spark plugs 8-17
Speedometer 2-4
Starting
  Before starting the engine 5-9
  Jump starting 6-6
  Precautions when starting and driving 5-2
  Push starting 6-8
  Starting the engine 5-9
Steering
  Power steering fluid 8-14
  Power steering system 5-24
  Tilting steering wheel 3-11
Storage 2-24
Sun shade 2-34
Sunroof 2-34
Supplemental air bag warning labels 1-41
Supplemental air bag warning light 1-41, 2-9
Supplemental restraint system 1-31
  Precautions on supplemental restraint system 1-31
Switch
  Fog light switch 2-19
  Hazard warning flasher switch 2-19
  Headlight switch 2-17
  Ignition switch 5-6
  Ignition switch automatic transmission models 5-6, 5-10
  Ignition switch manual transmission models 5-7, 5-14
  Overdrive switch 5-13
  Power door lock switch 3-4
  Rear window and outside mirror defroster switch 2-16
  Turn signal switch 2-18
  Vehicle dynamic control (VDC) off switch 2-21

T

Tachometer 2-4
Temperature gauge, Engine coolant temperature gauge 2-5
Theft (Nissan Vehicle Immobilizer System), Engine start 2-14
Three way catalyst 5-3
Tilting steering wheel 3-11
Tire
  Flat tire 6-2
  Uniform tire quality grading 9-18
Tires
  Tire chains 8-38
  Tire pressure 8-34
  Tire rotation 8-39
  Types of tires 8-37
  Wheel/tire size 9-8
  Wheels and tires 8-34
Tonneau cover 2-31
Top tether strap child restraints 1-26
Towing
  Tow truck towing 6-9
  Towing a trailer 9-14
  Towing load/specification chart 9-14
  Towing safety 9-16
Trailer towing 9-14
Transmission
  Automatic transmission fluid (ATF) 8-13
  Driving with automatic transmission 5-6, 5-10
  Driving with manual transmission 5-7, 5-14
  Transmission selector lever lock release 5-12
Transmitter (See remote keyless entry system) 3-4
Traveling or registering your vehicle in another country 9-9
Turn signal switch 2-18

U

Underbody cleaning 7-3
Uniform tire quality grading 9-18

V

Vanity mirror 3-13
Vehicle
  Dimensions and weights 9-8
  Identification number (VIN) 9-9
  Loading information 9-11
  Recovery (freeing a stuck vehicle) 6-12
  Security system 2-12
  Vehicle dynamic control (VDC) off switch 2-21
Ventilators 4-2

W

Warning labels, Air bag warning labels 1-41
Warning light
  4WD warning light 5-21
  Air bag warning light 1-41, 2-9
  Anti-lock brake warning light 2-7
  Brake warning light 2-8

Door open warning light 2-8
Seat belt warning light and chime 2-9
Warning lights 2-7
Warning, Hazard warning flasher switch 2-19
Warning, Warning/indicator lights and audible reminders 2-7
Warranty, Emission control system warranty 9-19
Washer switch
Rear window wiper and washer switch........ 2-16
Windshield wiper and washer switch 2-15
Washing 7-2
Waxing.. 7-2
Weights (See dimensions and weights) 9-8
Wheel/tire size.. 9-8
Wheels and tires 8-34
Cleaning aluminum alloy wheels 7-3
Window washer fluid 8-15
Window(s)
Cleaning 7-3, 7-4
Power windows... 2-32
Windshield wiper and washer switch................. 2-15
Wiper
Rear window wiper and washer switch........ 2-16
Rear window wiper blade................................ 8-21
Windshield wiper and washer switch 2-15
Wiper blades 8-19

MEMO

GAS STATION INFORMATION

FUEL RECOMMENDATION:

Use unleaded regular gasoline with an octane rating of at least 87 AKI (Anti-Knock Index) number (Research octane number 91).

CAUTION

Using a fuel other than that specified could adversely affect the emission control systems, and may also affect warranty coverage.

Under no circumstances should a leaded gasoline be used, since this will damage the three way catalyst.

For additional information, see “Capacities and recommended fuel/lubricants” in the “9. Technical and consumer information” section.

ENGINE OIL RECOMMENDATION:

- API Certification Mark
- API grade SG/SH, Energy Conserving I & II or API grade SJ or SL, Energy Conserving
- ILSAC grade GF-I, GF-II & GF-III
- SAE 5W-30 viscosity oil is preferred for all ambient temperatures. SAE 10W-30, 10W-40 viscosity oil may be used for ambient temperatures above −18°C (0°F).

See “Capacities and recommended fuel/lubricants” in the “9. Technical and consumer information” section for engine oil and oil filter recommendation.

COLD TIRE PRESSURES:

See Tire and Loading Information label affixed to the inside of the driver side center pillar.

NEW VEHICLE BREAK-IN PROCEDURES RECOMMENDATION:

During the first 2,000 km (1,200 miles) of vehicle use, follow the recommendations outlined in the “Break-in schedule” Information found in the “5. Starting and driving” section of this Owner’s Manual.

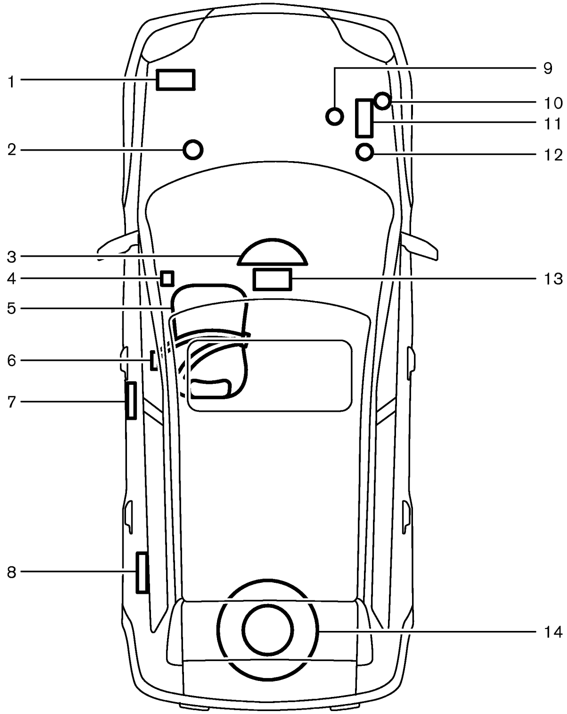

QUICK REFERENCE

1. Battery (P.8-15)
2. Brake fluid (P.8-14)
3. Meters and gauges (P.2-3)
4. Hood release (P.3-8)
5. Seat (P.1-2)
6. Seat belt (P.1-10)
7. Door lock/key (P.3-3)
8. Fuel (P.3-10, P.9-2)
9. Engine oil (P.8-10)
10. Windshield washer fluid (P.8-15)
11. Engine coolant (P.8-8)
12. Power steering fluid (P.8-14)
13. Audio system (P.4-10)/
    Heater and air conditioner (P.4-3)
14. Spare tire (P.6-2)